Lamb

Katalog
ABB Prozessmotoren

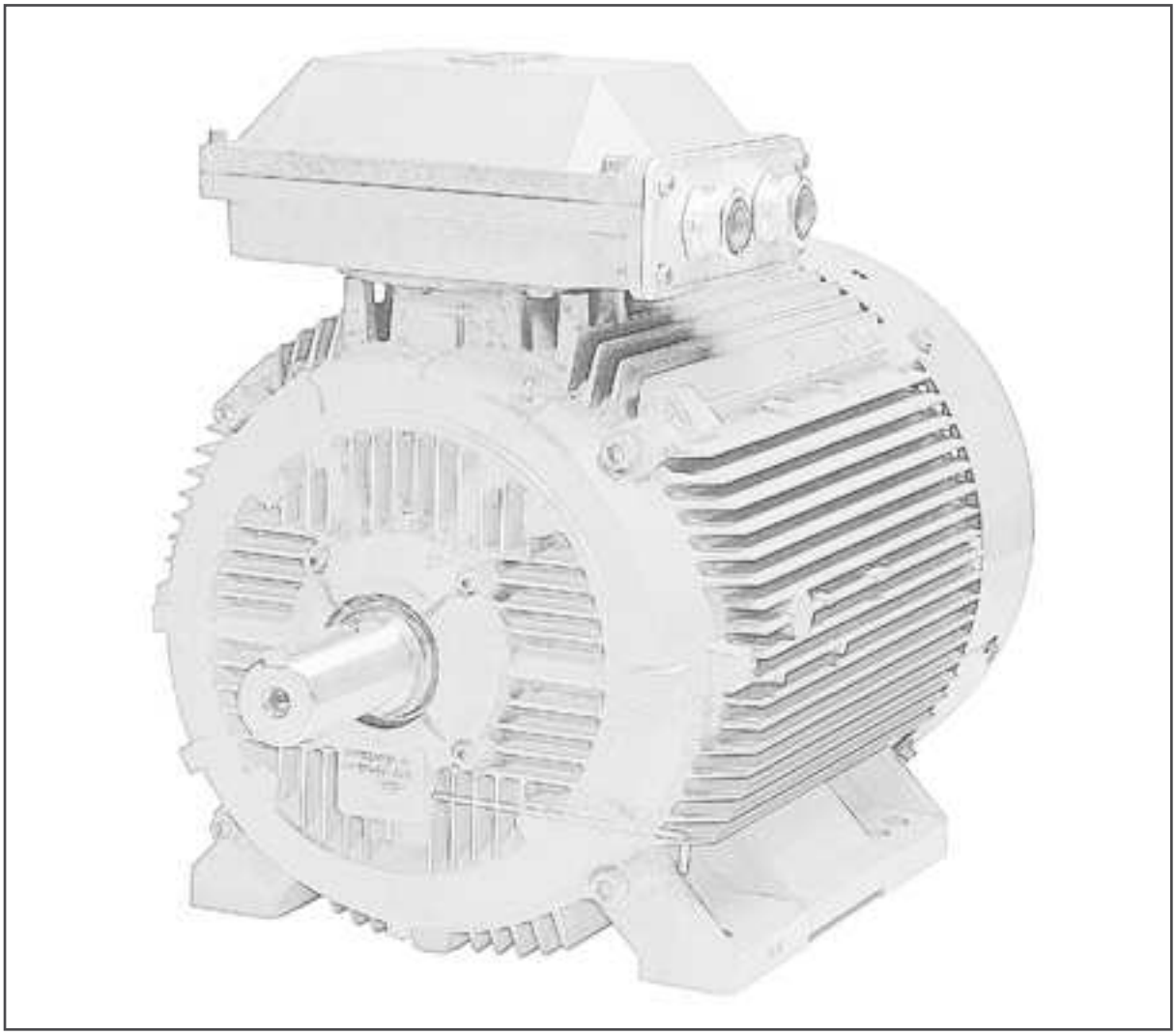

KAT-ABPM-1217

Ideen verbinden, Technik nutzen

CATALOG | DECEMBER 2017

Low voltage

Process performance motors

400 V 50 Hz, 460V 60 Hz

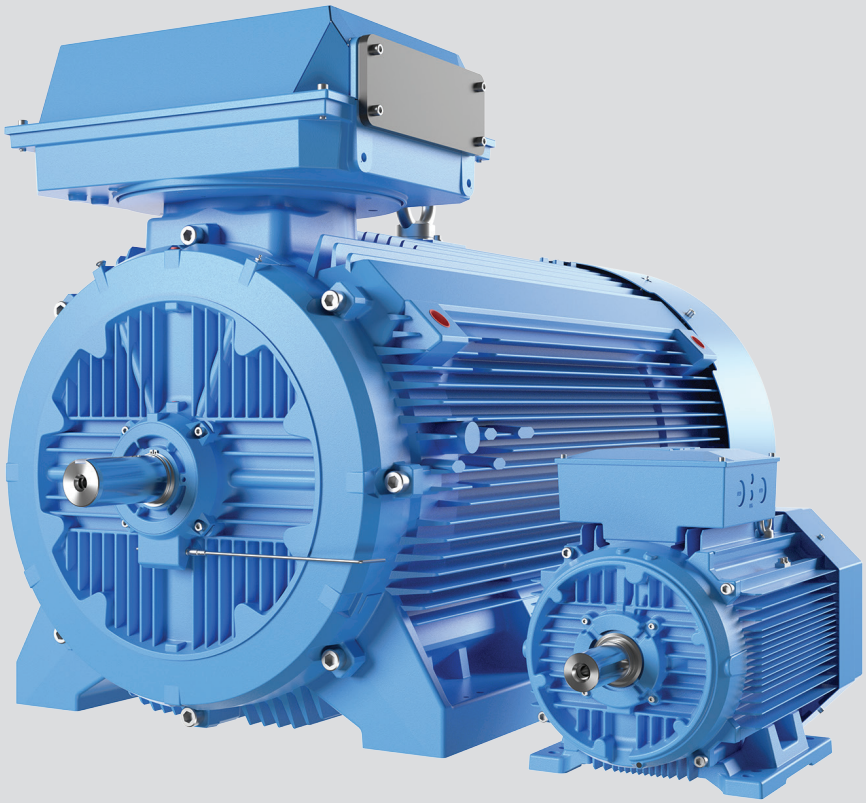

With expertise, and a comprehensive portfolio of products and life-cycle services, we help value-minded industrial customers improve their energy efficiency and productivity.

Low voltage Process performance motors

Sizes 63 to 450, 0.09 to 1000 kW

4	**General information**
7	Mounting arrangements
8	Cooling
9	Degrees of protection: IP code/IK code
10	Insulation
11	Voltage and frequency
12	Surface treatment
13	Variable speed drives with Process performance motors
18	**Cast iron motors**
18	Ordering information
19	Rating plates
20	Technical data
47	Variant codes
54	Mechanical design
76	Dimension drawings
84	Accessories
92	Cast iron motors in brief
95	Motor construction
98	**Aluminum motors**
98	Ordering information
99	Rating plates
100	Technical data
119	Variant codes
124	Mechanical design
138	Dimension drawings
139	Dimension drawings
140	Dimension drawings
141	Accessories
142	Aluminum motors in brief
144	**Total product offering**
145	**ABB's portfolio of drives**

International motor efficiency standards and regulations

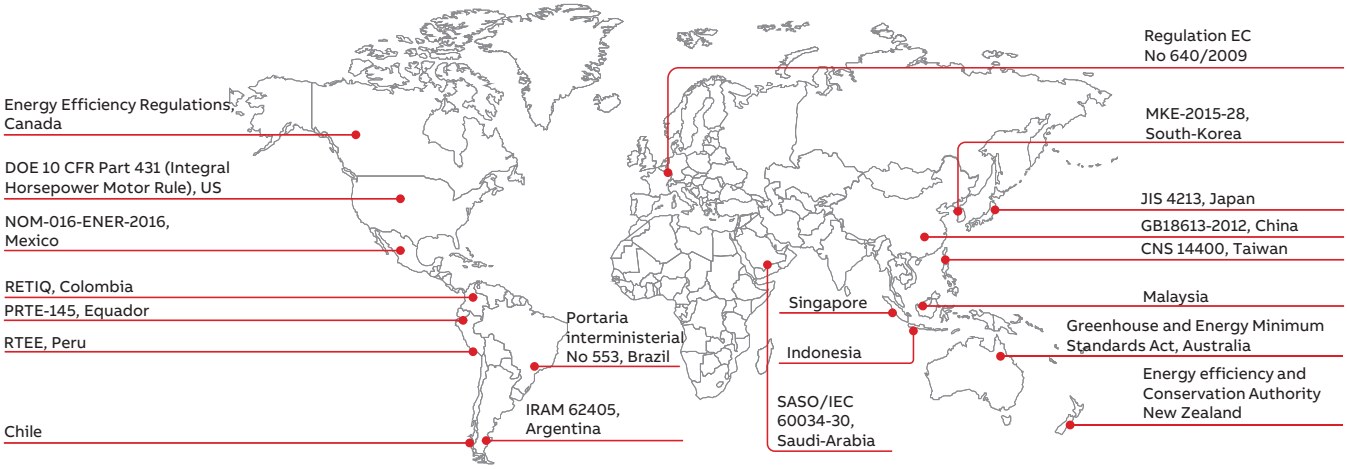

Since the validation of IEC 60034-30:2008 and its refined version IEC 60034-30-1:2014, a worldwide energy efficiency classification system has existed for low voltage three-phase asynchronous motors. These international standards have been created to enable and increase the level of harmonization in efficiency regulations around the world and to also cover motors for explosive atmospheres.

IEC 60034-30-1:2014 defines International Efficiency (IE) classes for single speed, three-phase, 50 Hz and 60 Hz induction motors. The efficiency levels defined in IEC 60034-30-1 are based on the test method specified in IEC 60034-2-1:2014. Both standards are part of an effort to unify motor testing procedures with CSA390-10 and IEEE 112 standards as well as efficiency and product labeling (IE) requirements to enable motor purchasers worldwide to easily recognize premium efficiency products.

To promote transparency in the market, IEC 60034-30-1 states that both the efficiency class and efficiency value must be shown on the motor rating plate and in product documentation. The documentation must clearly indicate the efficiency testing method used as different methods can produce differing results.

Minimum energy performance standards
While the IEC as an international standardization organization sets guidelines for motor testing and efficiency classes, the organization does not regulate efficiency levels in countries. The biggest drivers for mandatory Minimum Energy Performance Standard (MEPS) levels for electric motors are global climate change, government targets to curb CO_2 emissions and rising electricity demand, especially in developing countries. The whole value chain, from manufacturer up to end user, must be aware of the legislation in order to meet local requirements, to save energy and reduce the carbon footprint.

Harmonized global standards and the increasing adoption of MEPS around the world are good news for all of us. However, it is important to remember that harmonization is an ongoing process. Even though MEPS are already in effect in several regions and countries, they are evolving and differ in terms of scope and requirements. At the same time, more countries are planning to adopt their own MEPS regulations. A view of existing and coming MEPS regulations in the world can be seen on the World map above.

To get the latest information please visit www.abb.com/motors&generators/energyefficiency.

—
01 IE Classes - 4-pole motors.

IEC 60034-30-1:2014
This standard defines four International Efficiency (IE) classes for single speed electric motors that are rated according to IEC 60034-1 or IEC 60079-0 (explosive atmospheres) and designed for operation on sinusoidal voltage.

- IE4 = Super premium efficiency
- IE3 = Premium efficiency, identical to the table in 10CFR431 ('NEMA Premium') in the USA and CSA C390-10:2015 for 60 Hz
- IE2 = High efficiency
- IE1 = Standard efficiency

IEC 60034-30-1 covers the power range from 0.12 kW up to 1000 kW. Most of the different technical constructions of electric motors are covered as long as they are rated for direct on-line operation. The coverage of the standard includes:

- Single speed electric motors (single and three-phase), 50 and 60 Hz
- 2, 4, 6 and 8 poles
- Rated output P_N from 0.12 kW to 1000 kW
- Rated voltage U_N above 50 V up to 1 kV
- Motors capable of continuous operation at their rated power with a temperature rise within the specified insulation temperature class
- Motors, marked with any ambient temperature within the range of -20 °C to +60 °C
- Motors, marked with an altitude up to 4000 m above sea level

By comparing IEC 60034-30-1 to CSA C390-10:2015 and "10CFR431 Subpart B – Electric motors", it can be seen that the efficiency limits and tables are well aligned and their major difference is in the scope of the output power where CSA and 10CFR431 have a maximum power of 500 hp. There are also some minor differences in the scope of excluded motors.

Note: CFR is Code of Federal Regulations.

The following motors are excluded from IEC 60034-30-1:

- Single-speed motors with 10 or more poles or multi-speed motors
- Motors completely integrated into a machine (for example pump, fan or compressor) that cannot be tested separately from the machine
- Brake motors, when the brake cannot be dismantled or separately fed

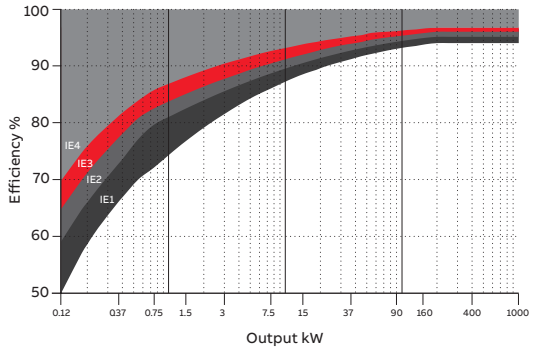

—
01

ABB and efficiency standards
ABB determines efficiency values according to IEC 60034-2-1 using the low uncertainty method (i.e. summaration of losses), with additional load losses determined by the method of residual loss.

It is good to mention and emphasize that the IEC 60034-2-1 test method, which is known as an indirect method, is technically equivalent to the test methods in the standards CSA 390-10 and IEEE 112 Method B leading to the equivalent losses and thus efficiency values. Both test methods can be used by ABB and shall be used for both Canada and the US where IEC 60034-2-1 is not recognized yet.

As the world market leader, ABB offers the largest range of LV motors available. It has long advocated the need for efficiency in motors, and high efficiency products have formed the core of its portfolio for many years. The core of ABB's Process performance range is based on a full range of IE2 and IE3 motors - with many available from stock. We also supply IE4 motors for additional energy savings.

Nominal efficiency limits defined in IEC 60034-30-1:2014 (reference values at 50 Hz, based on test methods specified in IEC 60034-2-1:2014).

Output	IE1 Standard efficiency				IE2 High efficiency				IE3 Premium efficiency				IE4 Super Premium efficiency			
kW	2 pole	4 pole	6 pole	8 pole	2 pole	4 pole	6 pole	8 pole	2 pole	4 pole	6 pole	8 pole	2 pole	4 pole	6 pole	8 pole
0.12	45.0	50.0	38.3	31.0	53.6	59.1	50.6	39.8	60.8	64.8	57.7	50.7	66.5	69.8	64.9	62.3
0.18	52.8	57.0	45.5	38.0	60.4	64.7	56.6	45.9	65.9	69.9	63.9	58.7	70.8	74.7	70.1	67.2
0.20	54.6	58.5	47.6	39.7	61.9	65.9	58.2	47.4	67.2	71.1	65.4	60.6	71.9	75.8	71.4	68.4
0.25	58.2	61.5	52.1	43.4	64.8	68.5	61.6	50.6	69.7	73.5	68.6	64.1	74.3	77.9	74.1	70.8
0.37	63.9	66.0	59.7	49.7	69.5	72.7	67.6	56.1	73.8	77.3	73.5	69.3	78.1	81.1	78.0	74.3
0.40	64.9	66.8	61.1	50.9	70.4	73.5	68.8	57.2	74.6	78.0	74.4	70.1	78.9	81.7	78.7	74.9
0.55	69.0	70.0	65.8	56.1	74.1	77.1	73.1	61.7	77.8	80.8	77.2	73.0	81.5	83.9	80.9	77.0
0.75	72.1	72.1	70.0	61.2	77.4	79.6	75.9	66.2	80.7	82.5	78.9	75.0	83.5	85.7	82.7	78.4
1.1	75.0	75.0	72.9	66.5	79.6	81.4	78.1	70.8	82.7	84.1	81.0	77.7	85.2	87.2	84.5	80.8
1.5	77.2	77.2	75.2	70.2	81.3	82.8	79.8	74.1	84.2	85.3	82.5	79.7	86.5	88.2	85.9	82.6
2.2	79.7	79.7	77.7	74.2	83.2	84.3	81.8	77.6	85.9	86.7	84.3	81.9	88.0	89,5	87.4	84.5
3	81.5	81.5	79.7	77.0	84.6	85.5	83.3	80.0	87.1	87.7	85.6	83.5	89.1	90.4	88.6	85.9
4	83.1	83.1	81.4	79.2	85.8	86.6	84.6	81.9	88.1	88.6	86.8	84.8	90.0	91.1	89.5	87.1
5.5	84.7	84.7	93.1	81.4	87.0	87.7	86.0	83.8	89.2	89.6	88.0	86.2	90.9	91.9	90.5	88.3
7.5	86.0	86.0	84.7	83.1	88.1	88.7	87.2	85.3	90.1	90.4	89.1	87.3	91.7	92.6	91.3	89.3
11	87.6	87.6	86.4	85.0	89.4	89.8	88.7	86.9	91.2	91.4	90.3	88.6	92.6	93.3	92.3	90.4
15	88.7	88.7	87.7	86.2	90.3	90.6	89.7	88.0	91.9	92.1	91.2	89.6	93.3	93.9	92.9	91.2
18.5	89.3	89.3	88.6	86.9	90.9	91.2	90.4	88.6	82.4	92.6	91.7	90.1	93.7	94.2	93.4	91.7
22	89.9	89.9	89.2	87.4	91.3	91.6	90.9	89.1	92.7	93.0	92.2	90.6	94.0	94.5	93.7	92.1
30	90.7	90.7	90.2	88.3	92.0	92.3	91.7	89.8	93.3	93.6	92.9	91.3	94.5	94.9	94.2	92.7
37	91.2	91.2	90.8	88.8	92.5	92.7	92.2	90.3	93.7	93.9	93.3	91.8	94.8	95.2	94.5	93.1
45	91.7	91.7	91.4	89.2	92.9	93.1	92.7	90.7	94.0	94.2	93.7	92.2	95.0	95.4	94.8	93.4
55	92.1	92.1	91.9	89.7	93.2	93.5	93.1	91.0	94.3	94.6	94.1	92.5	95.3	95.7	95.1	93.7
75	92.7	92.7	92.6	90.3	93.8	94.0	93.7	91.6	94.7	95.0	94.6	93.1	95.6	96.0	95.4	94.2
90	93.0	93.0	92.9	90.7	94.1	94.2	94.0	91.9	95.0	95.2	94.9	93.4	95.8	96.1	95.6	94.4
110	93.3	93.3	93.3	91.1	94.3	94.5	94.3	92.3	95.2	95,4	95.1	93.7	96.0	96.3	95.8	94.7
132	93.5	93.5	93.5	91.5	94.6	94.7	94.6	92.6	95.4	95.6	95.4	94.0	96.2	96.4	96.0	94.9
160	93.8	93.8	93.8	91.9	94.8	94.9	94.8	93.0	95.6	95.8	95.6	94.3	96.3	96.6	96.2	95.1
200	94.0	94.0	94.0	92.5	95.0	95.1	95.0	93.5	95.8	96.0	95.8	94.6	96.5	96.7	96.3	95.4
250	94.0	94.0	94.0	92.5	95.0	95.1	95.0	93.5	95.8	96.0	95.8	94.6	96.5	96.7	96.5	95.4
315	94.0	94.0	94.0	92.5	95.0	95.1	95.0	93.5	95.8	96.0	95.8	94.6	96.5	96.7	96.6	95.4
355	94.0	94.0	94.0	92.5	95.0	95.1	95.0	93.5	95.8	96.0	95.8	94.6	96.5	96.7	96.6	95.4
400	94.0	94.0	94.0	92.5	95.0	95.1	95.0	93.5	95.8	96.0	95.8	94.6	96.5	96.7	96.6	95.4
450	94.0	94.0	94.0	92.5	95.0	95.1	95.0	93.5	95.8	96.0	95.8	94.6	96.5	96.7	96.6	95.4
500-1000	94.0	94.0	94.0	92.5	95.0	95.1	95.0	93.5	95.8	96.0	95.8	94.6	96.5	96.7	96.6	95.4

Mounting arrangements

Foot-mounted motor

Code I / code II						Product code pos. 12
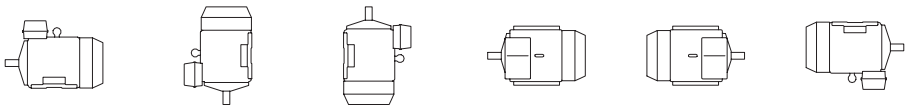						A: foot-mounted, term. box top R: foot-mounted, term. box RHS L: foot-mounted, term. box LHS
IM B3	IM V5	IM V6	IM B6	IM B7	IM B8	
IM 1001	IM 1011	IM 1031	IM 1051	IM 1061	IM 1071	

Flange-mounted motor, large flange

Code I / code II						Product code pos. 12
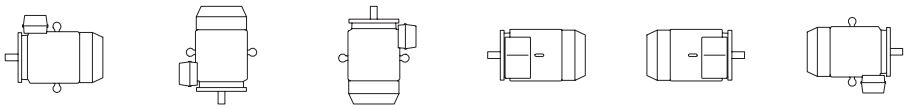						B: flange mounted, large flange
IM B5	IM V1	IM V3	*)	*)	*)	
IM 3001	IM 3011	IM 3031	IM 3051	IM 3061	IM 3071	

Flange-mounted motor, small flange

Code I / code II						Product code pos. 12
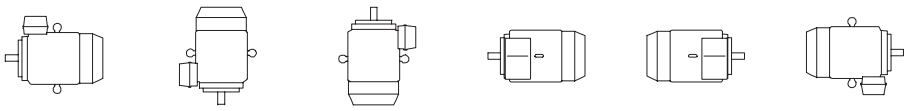						C: flange mounted, small flange
IM B14	IM V18	IM V19	*)	*)	*)	
IM 3601	IM 3611	IM 3631	IM 3651	IM 3661	IM 3671	

Foot- and flange-mounted motor with feet, large flange

Code I / code II						Product code pos. 12
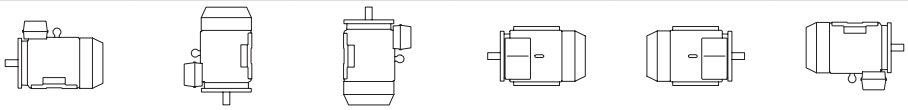						H: foot/flange-mounted, term. box top S: foot/flange-mounted, term. box RHS T: foot/flange-mounted, term. box LHS
IM B35	IM V15	IM V35	*)	*)	*)	
IM 2001	IM 2011	IM 2031	IM 2051	IM 2061	IM 2071	

Foot- and flange-mounted motor with feet, small flange

Code I / code II						Product code pos. 12
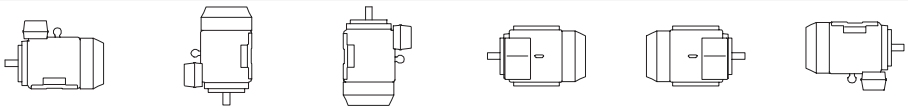						J: foot/flange-mounted, small flange
IM B34	IM V17					
IM 2101	IM 2111	IM 2131	IM 2151	IM 2161	IM 2171	

Foot-mounted motor, shaft with free extensions

Code I / code II						Product code pos. 12
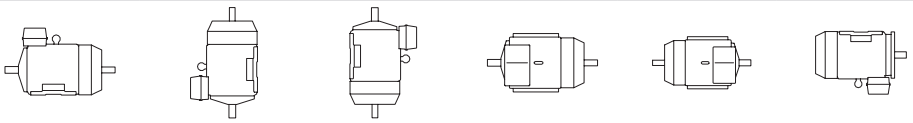						
IM 1002	IM 1012	IM 1032	IM 1052	IM 1062	IM 1072	

*) Not stated in IEC 60034-7.
Note: If the motor is mounted shaft upwards, take measures to prevent water or any other liquid from running down the shaft into the motor.

General information
Cooling

Designation system concerning methods of cooling refers to standard IEC 60034-6.

Explanation of the product code

International Cooling	Circuit arrangement	Primary coolant	Method of movement of primary coolant	Secondary coolant	Method of movement of secondary coolant
IC	4	(A)	1	(A)	6
	1	2	3	4	5

Position 1

0:	Free circulation (open circuit)
4:	Free circulatio (open circuit)

Position 2

A:	For air (omitted for simplifi ed designation)

Position 3

0:	Free convection
1:	Self-circulation
6:	Machine-mounted independent component

Position 4

A:	For air (omitted for simplifi ed designation)
W:	For water

Position 5

0:	Free convection
1:	Self-circulation
6:	Machine-mounted independent component
8:	Relative displacement

General information

Degrees of protection: IP code/IK code

Classification of degrees of protection provided by enclosures of rotating machines are refers to:

- Standard IEC 60034-5 or EN 60529 for IP code
- Standard EN 50102 for IK code

IP protection

Protection of persons against getting in contact with (or approaching) live parts and against contact with moving parts inside the enclosure. Also protection of the machine against ingress of solid foreign objects. Protection of machines against the harmful effects due to the ingress of water.

Explanation of the IP code

Ingress protection	Degree of protection to persons and to parts of the motors inside the enclosure	Degree of protection provided by the enclosure with respect to harmful effects due to ingress of water
IP	5	5
	1	2

Position 1	
2:	Motors protected against solid objects greater than 12 mm
4:	Motors protected against solid objects greater than 1 mm
5:	Dust-protected motors
6:	Dust-tight motors

Position 2	
3:	Motors protected against spraying water
4:	Motors protected against splashing water
5:	Motors protected against water jets
6:	Motors protected against heavy seas

IK code

Classification of degrees of protection provided by enclosure for motors against external mechanical impacts.

Explanation of the IK code

International mechanical protection	Characteristic group
IK	08
	1

Position 1	
Relation between IK code and impact energy:	
IK code	**Impact energy/Joule**
0:	Not protected according to EN 50102
01:	0.15
02:	0.2
03:	0.35
04:	0.5
05:	0.7
06:	1
07:	2
08:	5 (ABB Standard)
09:	10
10:	20

Insulation

—
01 Safety margins per thermal class.

ABB uses class F insulation, which, with temperature rise B, is the most common requirement among industry today.

The use of class F insulation with class B temperature rise gives ABB products a 25 °C safety margin. This can be used to increase the loading for limited periods, to operate at higher ambient temperatures or altitudes, or with greater voltage and frequency tolerances. It can also be used to extend insulation. For instance, a 10 K temperature reduction will extend the insulation life.

Thermal class 130 (B)
- Nominal ambient temperature 40 °C
- Max permissible temperature rise 80 K
- Hot spot temperature margin 10 K

Thermal class 155 (F)
- Nominal ambient temperature 40 °C
- Max permissible temperature rise 105 K
- Hot spot temperature margin 10 K

Thermal class 180 (H)
- Nominal ambient temperature 40 °C
- Max permissible temperature rise 125 K
- Hot spot temperature margin 10 K

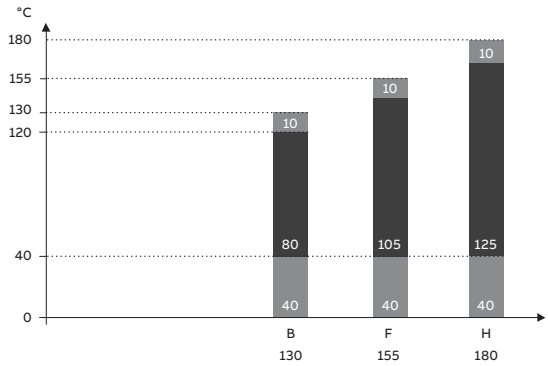

—
01

General information
Voltage and frequency

—
01 Voltage and frequency deviation in zones A and B.

The impact on temperature rise caused by voltage and frequency fluctuation is defined in IEC 60034-1. The standard divides the combinations into two zones, A and B. Zone A is the combination of voltage deviation of +/-5 % and frequency deviation of +/-2 %. Zone B is the combination of voltage deviation of +/-10 % and frequency deviation of +3/-5 %. This is illustrated in figure below.

Motors are capable of supplying the rated torque in both zones A and B, but the temperature rise will be higher than at rated voltage and frequency. Motors can be run in zone B only for a short period of time.

Key	
X axis	frequency p.u.
Y axis	voltage p.u.
1	zone A
2	zone B (outside zone A
3	rating point

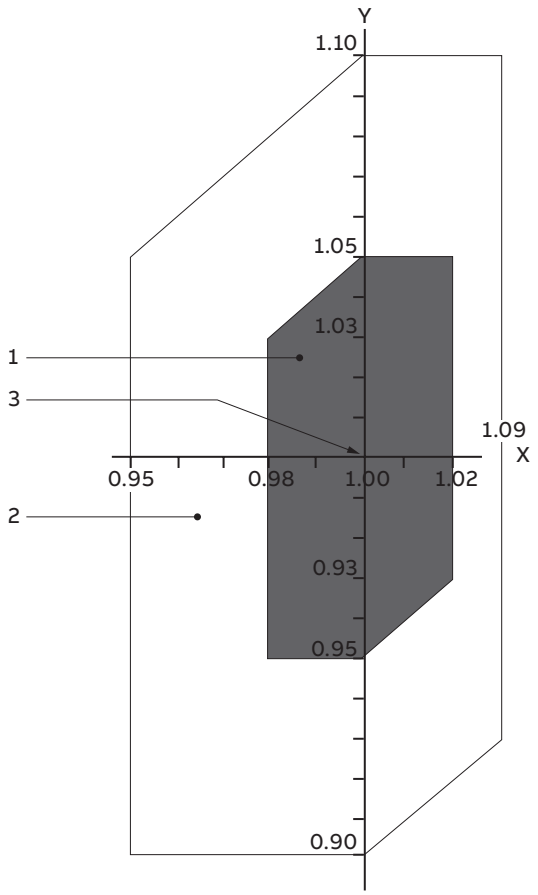

—
01

Surface treatment

The surface treatment categorization of ABB motors is based on the ISO 12944 standard. ISO 12994-5 divides paint system durability into three categories: low (L), medium (M), and high (H). Low durability corresponds to a lifetime of 2 - 5 years, medium to 5 – 15 years, and high durability to over 15 years.

The durability range is not a guaranteed lifetime. Its purpose is to help the owner of the motor plan for appropriate maintenance intervals. More frequent maintenance may be required because of fading, chalking, contamination, wear and tear, or for other reasons.

ABB's standard surface treatment is corrosivity category C3, durability range M (which equal to medium corrosivity and medium durability). Special surface treatment is available in corrosivity categories C4 and C5-M, durability class M for both. In addition, surface treatment according to the NORSOK standard for offshore environments is available as an option.

The standard ABB paint color for motors is Munsell blue 8B 4.5/3.25.

Corrosivity category	Outdoor atmospheres	Indoor atmospheres	Use in ABB motors
C1, very low	Not used	Heated buildings with clean atmospheres	Not available
C2, low	Atmospheres with low level pollution, mostly rural areas.	Unheated buildings where condensation may occur, such as depots and sports halls.	Not available
C3, medium	Urban and industrial atmospheres, moderate sulfur dioxide pollution. Coastal areas with low salinity.	Production rooms with high humidity and some air pollution; food processing plants, laundries, breweries, dairies.	Standard treatment
C4, high	Industrial areas and coastal areas with moderate salinity.	Chemical plants, swimming pools, coastal ship- and boatyards.	Optional treatment for cast iron motors, variant code 115
C5-I, very high (industrial)	Industrial areas and coastal areas with high humidity and aggressive atmosphere.	Buildings or areas with nearly permanent condensation and high pollution.	Not available
C5-M, very high (marine)	Coastal and offshore areas with high salinity.	Buildings or areas with nearly permanent condensation and high pollution.	Optional treatment for cast iron motors, variant code 754, 711

Atmospheric corrosivity categories and recommended environments.

Variable-speed drives with process performance motors

Frequency converters provide significant benefits when used together with ABB process performance motors. The advantages include better process control and energy savings through regulation of motor speed, and smooth starting with reduced inrush current, reducing the stress on the equipment and supply network.

By choosing an ABB motor–drive package, users can be confident that the motor and drive combination is optimized for their application; it is a working package with known performance, as the combination has been tested and verified.

Process performance motors are designed for both DOL and variable-speed operation, and will, either as standard or by adding a few extras, be suitable for variable-speed operation.

When selecting process performance motors for VSDs, the following points must be taken into consideration. The DriveSize selection software available at www.abb.com helps in selecting the optimal combination of motor, drive and supply transformer.

Operating speed

Process performance motors are designed to work over a wide speed range and also at speeds significantly higher than nominal. The maximum speeds can be found on motor rating plates or in DriveSize. In addition to motor speed, make sure that the maximum or critical speed of the entire application is not exceeded.

Guideline maximum speed values for process performance motors are shown in Table 1.

	Maximum speed, r/min	
Motor size	**2-pole motors**	**4-pole motors**
71-80	6000	4000
90-100	6000	6000
112-200	4500	4500
225-250	3600	3600
280	3600	2000
315	3600	2200
355 SM, ML, LKA	3600	2200
355 LKB	3000	2200
400	3600	2200
450	3000	2200

Table 1. Guideline maximum speed values for process performance cast iron motors.

Ventilation

When the motor is operating at low speeds, the cooling capacity of the fan decreases, which again reduces the motor's load capacity. A separate, constant-speed fan (variant codes 183, 422, 514) can be used to increase cooling capacity at low speed if required for loads with constant torque characteristics.

Lubrication

The lubrication interval of regreasable bearings depends on the running speed of the motor and the bearing temperature. Motors in frame size 280 and larger are delivered as standard with a lubrication plate in tabular format that states the relubrication intervals at different speeds and temperatures. A similar plate is optional for sizes 160–250 and can be ordered using variant code 795. Smaller motors usually have greased, sealed-for-life bearings. Please refer to the installation, operation and safety manual for further information on lubrication.

Winding insulation

To ensure that motors operate reliably, the effects of non-sinusoidal output voltages from the converter must be taken into consideration when selecting the correct insulation system for the motor and output filters for the converter. The insulation and filters must be selected according to Table 2.

Winding insulation and filters required	
$U_N \leq 500$ V	Standard insulation
$U_N \leq 600$ V	Standard insulation + dU/dt filters OR Special insulation (variant code 405)
$U_N \leq 690$ V	Special insulation (variant code 405) AND dU/dt-filters at converter output
600 V < $U_N \leq 690$ V cable length > 150 m	Special insulation (variant code 405)

Table 2. Selection of motor winding insulation and converter output filters

For more information on dU/dt filters, see the relevant ABB drives catalogs.

For other converters and cases where the guidelines shown in Table 2 cannot be applied, selection must be based on the voltages present at the motor terminals.

—
01 Maximum allowed phase-to-phase voltage peaks at motor terminals, as a function pulse rise time.

Allowed phase-to-ground voltage peaks at motor terminals:

- 1,300 V peak: standard insulation
- 1,800 V peak: special insulation, variant code 405

The maximum allowed phase-to-phase voltage peaks at the motor terminals as a function of pulse rise time are shown in Figure 01. The higher curve (special insulation) applies to motors with special winding insulation for frequency converter supply (variant code 405). Standard insulation applies to motors with a standard design.

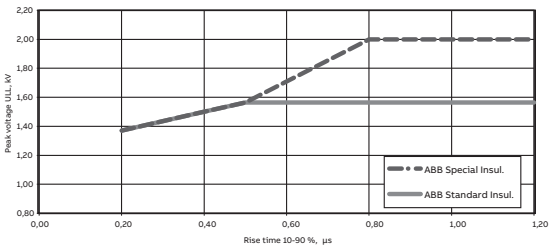

—
01

Bearing currents
Bearing voltages and currents must be avoided in all motors to ensure reliable operation of the entire application. Table 3 gives the selection rules depending on motor output power and frame size when used together with ABB converters; the same rules can also be applied as guidance when using ABB process performance motors with other converters.

Nominal power (P_N and / or Frame size (IEC)	Precautionary measures
P_N < 100 kW	No action needed
P_N ≥ 100 kW OR IEC 315 ≤ Frame size ≤ IEC 355	Insulated non-drive end bearing
P_N ≥ 350 kW OR IEC 400 ≤ Frame size ≤ IEC 450	Insulated non-drive end bearing AND Common mode filter at the converter

Table 3. Precautionary measures to avoid bearing currents in variable speed drives.

Common mode filters
Common mode filters are installed at the output of the frequency converter. These filters reduce common mode currents and so decrease the risk of bearing currents. Common mode filters do not significantly affect the phase of main voltages on motor terminals. For more information, see ABB drives catalogs.

Insulated bearings
ABB uses bearings with an insulated outer race or hybrid bearings with ceramic rolling elements. Insulated bearings at the non-drive end should be selected as indicated in Table 3. This solution can be ordered using variant code 701.

Earthing and cabling
For motors with a nominal power above 30 kW, cables with a symmetrical concentric protective earth should be used across the system. The same type of cables are also recommended for motors with an output of 30 kW and below.

Solutions for persistent bearing currents
In very rare cases, bearing currents might still exist even if the measures specified above have been taken. For such installations, there are two advanced methods that would provide a remedy: either a shaft grounding bush, or insulated bearings at both ends.

The shaft grounding bush is installed inside the motor to protect it from the environment and ensure good grounding of the shaft. The shaft grounding brush can be ordered using variant code 588.

The second advanced solution is to mount insulated bearings at both ends. These can either be bearings with an insulated out race, or hybrid bearings with ceramic rolling elements. Insulated bearings at both ends can be ordered using variant code 702. Note that this variant cannot be combined with special drive-end bearing solutions, such as roller bearings or angular contact ball bearings.

Electromagnetic compatibility (EMC)
The high-frequency components in a variable-speed drive might cause electromagnetic interference with other equipment in the installation. To avoid this, certain measures should be taken. To meet EMC requirements, special EMC cables glands with a 360° connection to the concentric protective earth conductor should be used. Such cable glands can be used with variant code 704.

Motor loadability with frequency converter drives
The difference in the temperature rise of a motor run direct on line compared to the same motor run with a converter is influenced by factors such as the cooling effect of a shaft-mounted fan depending on the speed of the motor, increased losses due to harmonics generated by the converter and reduced flux above the field weakening point. The effects of all these factors are combined in the loadability curves.

The loadability curves shown in Figures 02-05 are generic and give indicative guidelines for dimensioning standard low-voltage motors used with a frequency converter.

The curves show the maximum continuous load torque as a function of frequency (speed), which results in the same temperature rise as opera-

tion with the rated sinusoidal supply at nominal frequency and full rated load.

Normally, process performance motors operate according to a class B temperature rise. For these motors, dimensioning should be according to the temperature rise B curve, or the motor can be slightly overloaded. In other words, it can be dimensioned according to the temperature rise F curve. However, if only a class F temperature rise with a sinusoidal supply is indicated for the motor in the technical data section, dimensioning must be done according to temperature rise curve B. If the motor is loaded according the temperature rise F curve, it will be necessary to check the temperature rise in other parts of the motor and ensure that the lubrication intervals and grease type are still appropriate.

02 Loadability curves for ABB frequency converters with DTC control.

03 Loadability curves for other frequency converters.

04 Loadability curves for ABB frequency converters with DTC control.

05 Loadability curves for other frequency converters.

Curves are valid for a field weakening point of 50 Hz.

Temperature rise B

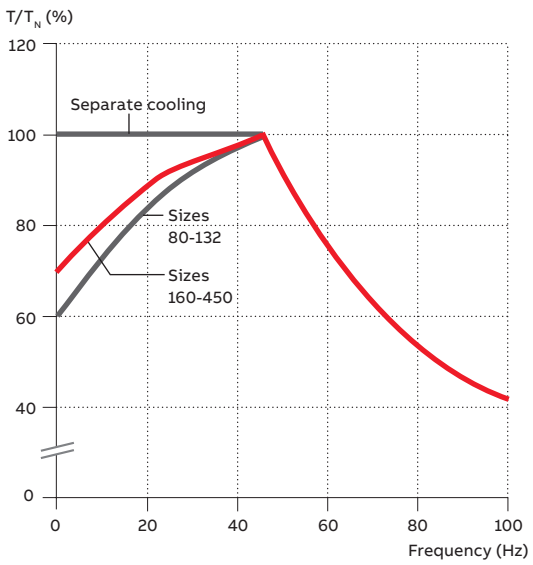

02

Temperature rise F

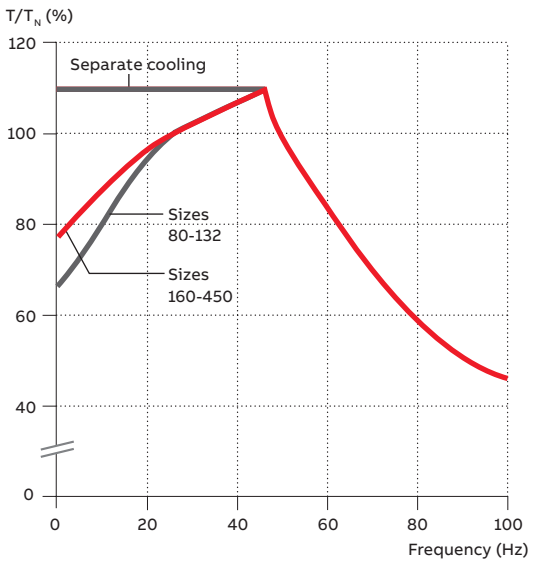

04

Temperature rise B

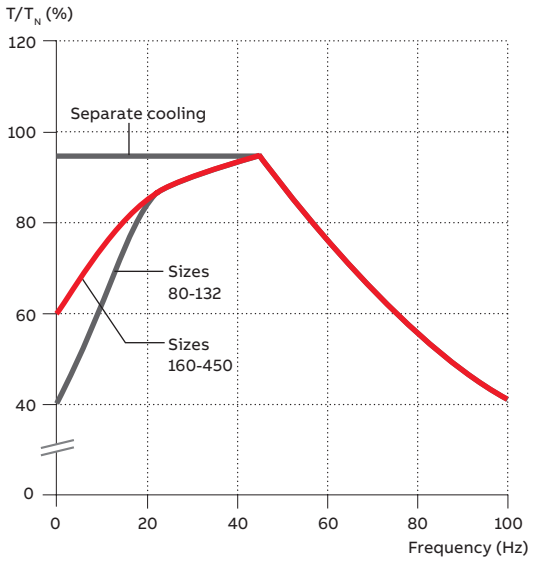

03

Temperature rise F

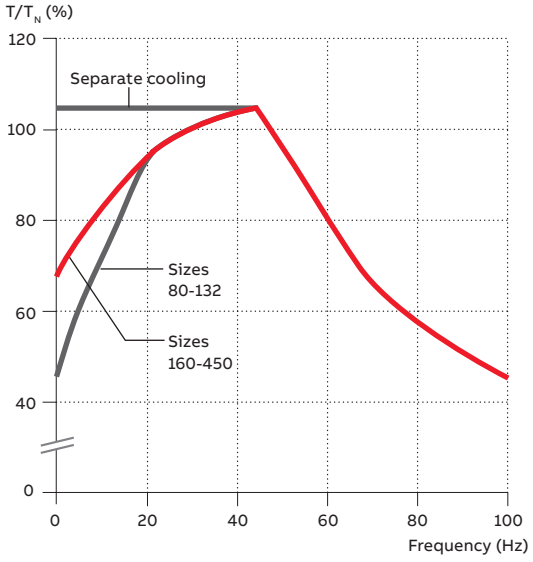

05

Low voltage Process performance cast iron motors

18	**Ordering information**
19	**Rating plates**
20	**Technical data IE2**
20	400 V, 50 Hz
29	460 V, 60 Hz
37	**Technical data IE3**
37	400V, 50Hz
43	460V, 60Hz
45	**Technical data IE4**
45	400 V, 50 Hz
47	**Variant codes**
54	**Mechanical design**
54	Motor frame and drain holes
56	Bearings
67	Terminal box
76	**Dimension drawings**
76	Motor sizes 71 - 132
78	Motor sizes 160 - 250
80	Motor sizes 280 - 315
82	Motor sizes 355 - 450
84	**Accessories**
84	Built-in brake
87	Separate cooling
89	Silencer
90	Slide rails
92	**Cast iron motors in brief**
95	**Motor construction**

Ordering information

Explanation of the product code

Motor type	Motor size	Product code	Mounting arrangement code, Voltage and frequency code, Generation code	Variant codes
M3BP	160MLA	3GBP 161	410 - ADG	003, etc.
		1 2 3 4 5 6 7	8 9 10 11 12 13 14	

Positions 1 to 4	
3GBP	Totally enclosed fan cooled squirrel cage motor with cast iron frame

Positions 5 and 6			
IEC size		IEC size	
07:	71	20:	200
08:	80	22:	225
09:	90	25:	250
10:	100	28:	280
12:	112	31:	315
13:	132	35:	355
16:	160	40:	400
18:	180	45:	450

Position 7	
Speed (Pole pairs)	
1:	2 poles
2:	4 poles
3:	6 poles
4:	8 poles
5:	10 poles
6:	12 poles
7:	> 12 poles
8:	Two-speed motors for fan drive motors for constant torque
9:	Multi-speed motors, two-speed

Positions 8 to 10
Serial number

Position 11
-(dash)

Position 12 (marked with black dot in data tables)	
Mounting arrangement	
A:	Foot-mounted, top-mounted terminal box
R:	Foot-mounted, terminal box RHS seen from D-end
L:	Foot-mounted, terminal box LHS seen from D-end
B:	Flange-mounted, large flange
C:	Flange-mounted, small flange (sizes 71 to 112)
H:	Foot- and flange-mounted, terminal box top-mounted

Position 12 (marked with black dot in data tables)	
J:	Foot- and flange-mounted, small flange with tapped holes
S:	Foot- and flange-mounted, terminal box RHS seen from D-end
T:	Foot- and flange-mounted, terminal box LHS seen from D-end
V:	Flange-mounted, special flange
F:	Foot- and flange-mounted. Special flange

Position 13 (marked with black dot in data tables)	
Voltage and frequency	
Single-speed motors	
B:	380 VΔ 50 Hz
D:	400 VΔ, 415 VΔ, 690 VY 50 Hz
E:	500 VΔ 50 Hz
F:	500 VY 50 Hz
S:	230 VΔ, 400 VY, 415 VY 50 Hz
T:	660 VΔ 50 Hz
U:	690 VΔ 50 Hz
X:	Other rated voltage, connection or frequency, 690 V maximum

Position 14
Generation code
A, B, C...G...K: The product code must be, if needed, followed by variant codes.

Efficiency values are given according to IEC 60034-2-1; 2014

For detailed dimension drawings please see our web-pages 'www.abb.com/motors&generators' or contact ABB.

Rating plates

—
01 Rating plate example, motor size 100, IE2.

02 Rating plate example, motor size 160, K generation, IE3.

03 Rating plate example, motor size 315, L generation, IE3.

04 Rating plate example, motor size 315, IE4.

The motor's main rating plate shows the motor's performance values with various connections at nominal speed. The rating plate also shows the efficiency level (IE2, IE3, or IE4), year of manufacture, and the lowest nominal efficiency at 100, 75, and 50 % nominal load.

The plate samples shown on this page present typical data rows. The actual content of the plate may vary according to your order and according to the motor's IE class.

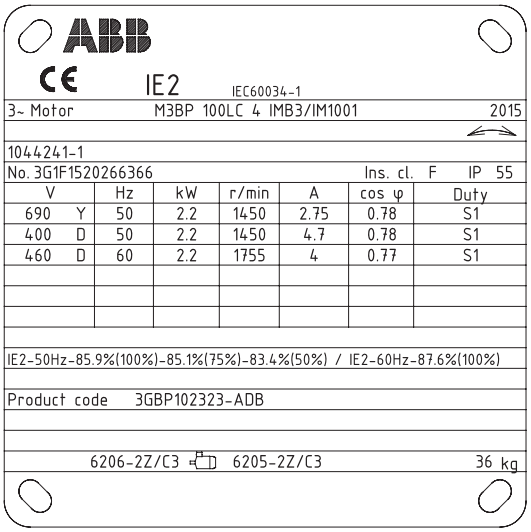

ABB

CE IE2 IEC60034-1

3~ Motor M3BP 100LC 4 IMB3/IM1001 2015

1044241-1

No. 3G1F1520266366 Ins. cl. F IP 55

V		Hz	kW	r/min	A	cos φ	Duty
690	Y	50	2.2	1450	2.75	0.78	S1
400	D	50	2.2	1450	4.7	0.78	S1
460	D	60	2.2	1755	4	0.77	S1

IE2-50Hz-85.9%(100%)-85.1%(75%)-83.4%(50%) / IE2-60Hz-87.6%(100%)

Product code 3GBP102323-ADB

6206-2Z/C3 6205-2Z/C3 36 kg

—
01

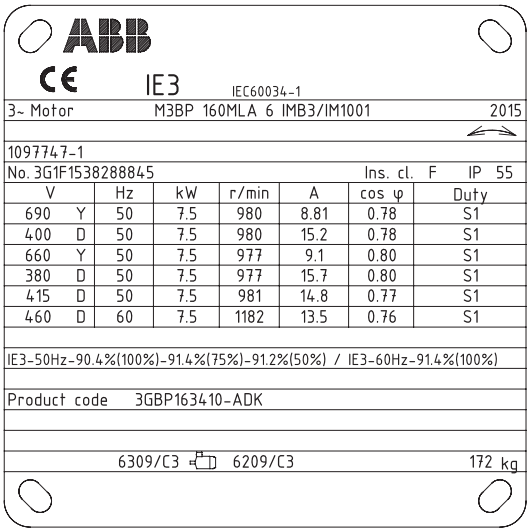

ABB

CE IE3 IEC60034-1

3~ Motor M3BP 160MLA 6 IMB3/IM1001 2015

1097747-1

No. 3G1F1538288845 Ins. cl. F IP 55

V		Hz	kW	r/min	A	cos φ	Duty
690	Y	50	7.5	980	8.81	0.78	S1
400	D	50	7.5	980	15.2	0.78	S1
660	Y	50	7.5	977	9.1	0.80	S1
380	D	50	7.5	977	15.7	0.80	S1
415	D	50	7.5	981	14.8	0.77	S1
460	D	60	7.5	1182	13.5	0.76	S1

IE3-50Hz-90.4%(100%)-91.4%(75%)-91.2%(50%) / IE3-60Hz-91.4%(100%)

Product code 3GBP163410-ADK

6309/C3 6209/C3 172 kg

—
02

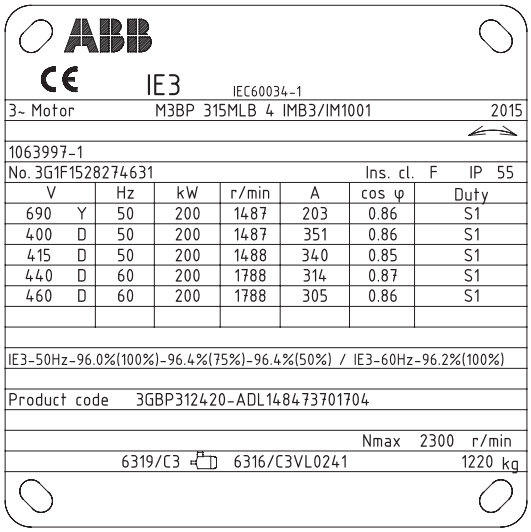

ABB

CE IE3 IEC60034-1

3~ Motor M3BP 315MLB 4 IMB3/IM1001 2015

1063997-1

No. 3G1F1528274631 Ins. cl. F IP 55

V		Hz	kW	r/min	A	cos φ	Duty
690	Y	50	200	1487	203	0.86	S1
400	D	50	200	1487	351	0.86	S1
415	D	50	200	1488	340	0.85	S1
440	D	60	200	1788	314	0.87	S1
460	D	60	200	1788	305	0.86	S1

IE3-50Hz-96.0%(100%)-96.4%(75%)-96.4%(50%) / IE3-60Hz-96.2%(100%)

Product code 3GBP312420-ADL148473701704

Nmax 2300 r/min

6319/C3 6316/C3VL0241 1220 kg

—
03

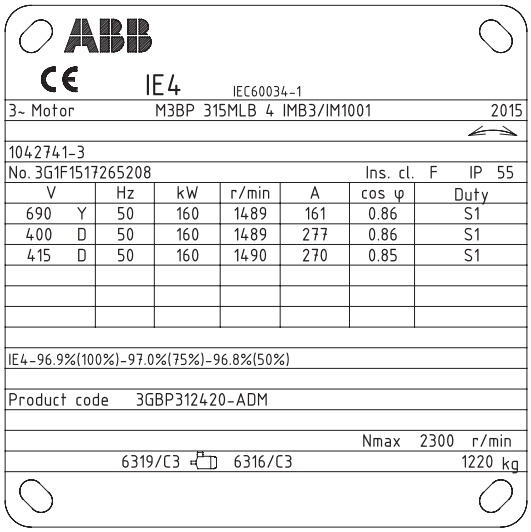

ABB

CE IE4 IEC60034-1

3~ Motor M3BP 315MLB 4 IMB3/IM1001 2015

1042741-3

No. 3G1F1517265208 Ins. cl. F IP 55

V		Hz	kW	r/min	A	cos φ	Duty
690	Y	50	160	1489	161	0.86	S1
400	D	50	160	1489	277	0.86	S1
415	D	50	160	1490	270	0.85	S1

IE4-96.9%(100%)-97.0%(75%)-96.8%(50%)

Product code 3GBP312420-ADM

Nmax 2300 r/min

6319/C3 6316/C3 1220 kg

—
04

Technical data, 400 V 50 Hz

IE2 cast iron motors

IP 55 - IC 411 - Insulation class F, temperature rise class B
IE2 efficiency class according to IEC 60034-30-1; 2014

Output kW		Motor type	Product code	Speed r/min	Efficiency IEC 60034-30-1; 2014 Full load 100%	3/4 load 75%	1/2 load 50%	Power factor Cosφ	Current I_N A	I_s/I_N	Torque T_N Nm	T_l/T_N	T_b/T_N	Moment of inertia J = 1/4 GD²kgm²	Weight kg	Sound pressure Level L_{PA} dB
3000 r/min = 2 poles					**400 V 50 Hz**				**CENELEC-design**							
0.37		M3BP 71MA 2	3GBP071321-••B	2768	74,8	75,4	72,4	0,78	0,89	4,5	1,27	2,2	2,3	0,00039	11	58
0.55		M3BP 71MB 2	3GBP071322-••B	2813	77,8	78,3	76,0	0,79	1,29	4,3	1,86	2,4	2,5	0,00051	11	56
0.75		M3BP 80MB 2	3GBP081322-••B	2895	80,6	79,6	75,6	0,74	1,8	7,7	2,4	4,2	4,2	0,001	16	57
1.1		M3BP 80MC 2	3GBP081323-••B	2870	81,8	81,7	78,9	0,80	2,44	7,5	3,63	3,7	4,6	0,0012	18	60
1.5		M3BP 90SLB 2	3GBP091322-••B	2900	82,2	82,9	81,3	0,87	3,26	7,5	4,9	2,5	2,6	0,00254	24	69
2.2		M3BP 90SLC 2	3GBP091323-••B	2885	84,7	86,8	85,7	0,88	4,2	6,8	7,2	1,9	2,5	0,0028	25	64
3		M3BP 100LB 2	3GBP101322-••B	2925	85,2	84,9	82,7	0,87	5,75	9,1	9,7	3,1	3,5	0,00528	36	68
4		M3BP 112MB 2	3GBP111322-••B	2895	86,1	87,0	86,6	0,89	7,52	8,1	13,1	2,9	3,2	0,00575	37	70
5.5		M3BP 132SMB 2	3GBP131322-••B	2865	87,7	88,4	87,7	0,86	10	7,0	18,3	2,6	2,7	0,0128	68	70
7.5		M3BP 132SMC 2	3GBP131324-••B	2890	88,2	88,8	87,6	0,89	13,7	7,3	24,9	2,6	3,6	0,0136	70	70
11		M3BP 160MLA 2	3GBP161410-••G	2938	90,6	91,5	91,1	0,90	19,2	7,5	35,7	2,4	3,1	0,044	127	69
15		M3BP 160MLB 2	3GBP161420-••G	2934	91,5	92,4	92,2	0,90	26	7,5	48,8	2,5	3,3	0,053	141	69
18.5		M3BP 160MLC 2	3GBP161430-••G	2932	92,0	93,1	93,1	0,92	31,5	7,5	60,2	2,9	3,4	0,063	170	69
22		M3BP 180MLA 2	3GBP181410-••G	2952	92,2	92,7	92,2	0,87	39,6	7,7	71,1	2,8	3,3	0,076	190	69
30		M3BP 200MLA 2	3GBP201410-••G	2956	93,1	93,5	92,8	0,90	51,6	7,7	96,9	2,7	3,1	0,178	283	72
37		M3BP 200MLB 2	3GBP201420-••G	2959	93,4	93,7	92,9	0,90	63,5	8,2	119	3,0	3,3	0,196	298	72
45		M3BP 225SMA 2	3GBP221210-••G	2961	93,6	93,9	93,1	0,88	78,8	6,7	145	2,5	2,5	0,244	347	74
55		M3BP 250SMA 2	3GBP251210-••G	2967	94,1	94,4	93,8	0,88	95,8	6,8	177	2,2	2,7	0,507	405	75
75	2)	M3BP 280SMA 2	3GBP281210-••G	2977	94,3	93,8	92,2	0,88	131	7,6	240	2,1	3,0	0,8	625	77
90	2)	M3BP 280SMB 2	3GBP281220-••G	2976	94,6	94,7	93,8	0,89	154	7,4	288	2,1	2,9	0,9	665	77
110	2)	M3BP 315SMA 2	3GBP311210-••G	2982	94,9	94,4	92,9	0,86	197	7,4	352	2,2	3,2	1,2	940	78
132	2)	M3BP 315SMB 2	3GBP311220-••G	2982	95,1	94,8	93,6	0,88	227	7,4	422	2,2	3,0	1,4	940	78
160	2)	M3BP 315SMC 2	3GBP311230-••G	2981	95,4	95,2	94,2	0,89	271	7,5	512	2,3	3,0	1,7	1025	78
200	2)	M3BP 315MLA 2	3GBP311410-••G	2980	95,7	95,7	94,9	0,90	335	7,7	640	2,6	3,0	2,1	1190	78
250	2)	M3BP 355SMA 2	3GBP351210-••G	2984	95,7	95,5	94,5	0,89	423	7,7	800	2,1	3,3	3	1600	83
315	2)	M3BP 355SMB 2	3GBP351220-••G	2980	95,7	95,6	94,9	0,89	531	7,0	1009	2,1	3,0	3,4	1680	83
355	2)	M3BP 355SMC 2	3GBP351230-••G	2984	95,7	95,7	94,9	0,88	603	7,2	1136	2,2	3,0	3,6	1750	83
400	2)	M3BP 355MLA 2	3GBP351410-••G	2982	96,9	96,7	96,0	0,88	677	7,1	1280	2,3	2,9	4,1	2000	83
450	2)	M3BP 355MLB 2	3GBP351420-••G	2983	97,1	97,1	96,5	0,90	743	7,9	1440	2,2	2,9	4,3	2080	83
500	2)	M3BP 355LKA 2	3GBP351810-••G	2982	96,9	96,9	96,5	0,90	827	7,5	1601	2,0	3,9	4,8	2320	83
560	3)	M3BP 400LA 2	3GBP401510-••G	2988	97,2	97,2	96,6	0,89	934	7,8	1789	2,5	3,7	7,9	2950	82
560	2)	M3BP 355LKB 2	3GBP351820-••G	2983	97,0	97,0	96,5	0,90	925	8,0	1792	2,2	4,1	5,2	2420	83
630	3)	M3BP 400LB 2	3GBP401520-••G	2987	97,4	97,2	96,7	0,89	1049	7,6	2014	2,6	3,7	8,2	3050	82
710	3)	M3BP 400LC 2	3GBP401530-••G	2987	97,5	97,4	96,9	0,89	1178	7,2	2270	2,6	3,4	9,3	3300	82
800	1)3)	M3BP 450LA 2	3GBP451510-••G	2990	97,4	97,2	96,6	0,87	1362	7,8	2555	1,3	3,4	12,2	4000	
900	1)3)	M3BP 450LB 2	3GBP451520-••G	2990	97,0	96,8	96,2	0,87	1534	7,6	2874	1,5	3,1	13,5	4200	

1) Temperature rise class F
2) -3dB(A) sound pressure level reduction with unidirectional fan construction. Direction of rotation must be stated when ordering, see variant codes 044 and 045
3) Unidirectional fan construction as standard. Direction of rotation must be stated when ordering, see variant codes 044 and 045

Technical data, 400 V 50 Hz

IE2 cast iron motors

IP 55 - IC 411 - Insulation class F, temperature rise class B
IE2 efficiency class according to IEC 60034-30-1; 2014

Output kW		Motor type	Product code	Speed r/min	Efficiency IEC 60034-30-1; 2014 Full load 100%	3/4 load 75%	1/2 load 50%	Power factor Cosφ	Current I_N A	I_s/I_N	Torque T_N Nm	T_l/T_N	T_b/T_N	Moment of inertia J = 1/4 GD²kgm²	Weight kg	Sound pressure Level L_{PA} dB
3000 r/min = 2 poles					**400 V 50 Hz**				**High-output design**							
22		M3BP 160MLD 2	3GBP161440-••G	2933	91,7	92,8	92,8	0,90	38	8,1	71,6	3,2	3,6	0,063	170	69
27		M3BP 160MLE 2	3GBP161450-••G	2939	92,2	93,1	93,0	0,90	46,4	8,8	87,7	3,4	3,8	0,072	184	69
30		M3BP 180MLB 2	3GBP181420-••G	2950	92,7	93,5	93,3	0,88	53	7,9	97,1	2,8	3,3	0,092	208	69
45	1)	M3BP 200MLC 2	3GBP201430-••G	2957	93,3	93,8	93,2	0,88	79,1	8,1	145	3,1	3,3	0,196	298	72
55	1)	M3BP 200MLD 2	3GBP201440-••G	2953	93,8	94,4	94,3	0,89	95	7,8	177	2,9	3,3	0,217	314	72
55		M3BP 225SMB 2	3GBP221220-••G	2961	93,9	94,3	93,6	0,88	96	6,5	177	2,4	2,5	0,274	369	74
75	1)	M3BP 225SMC 2	3GBP221230-••G	2969	94,4	94,6	94,0	0,84	136	7,4	241	3,2	3,1	0,309	396	74
75		M3BP 250SMB 2	3GBP251220-••G	2970	94,5	94,8	94,4	0,89	128	7,6	241	2,8	3,1	0,583	451	75
80	1)	M3BP 225SMD 2	3GBP221240-••G	2964	94,4	94,8	94,3	0,87	140	7,3	257	3,0	2,8	0,329	410	74
90	1)	M3BP 250SMC 2	3GBP251230-••G	2971	94,9	95,2	94,8	0,89	153	7,6	289	2,5	3,1	0,644	487	75
110	2)	M3BP 280SMC 2	3GBP281230-••G	2978	95,1	95,1	94,5	0,90	186	7,9	352	2,4	3,0	1,15	725	77
132	2)	M3BP 280MLA 2	3GBP281410-••G	2977	95,3	95,3	94,8	0,90	221	7,5	423	2,5	3,0	1,4	840	81
160	2)	M3BP 280MLB 2	3GBP281420-••G	2976	95,5	95,7	95,3	0,91	265	7,6	513	2,8	3,0	1,55	890	81
250	2)	M3BP 315LKA 2	3GBP311810-••G	2980	95,7	95,7	95,2	0,89	423	8,1	801	2,8	2,9	2,65	1440	78
315	2)	M3BP 315LKC 2	3GBP311830-••G	2981	95,7	95,7	95,4	0,89	533	8,8	1009	3,2	3,2	3,3	1630	78

1) Temperature rise class F
3) Unidirectional fan construction as standard. Direction of rotation must be stated when ordering, see variant codes 044 and 045

Technical data, 400 V 50 Hz

IE2 cast iron motors

IP 55 - IC 411 - Insulation class F, temperature rise class B
IE2 efficiency class according to IEC 60034-30-1; 2014

Output kW	Motor type	Product code	Speed r/min	Efficiency IEC 60034-30-1; 2014 Full load 100%	3/4 load 75%	1/2 load 50%	Power factor Cosφ	Current I_N A	I_s/I_N	Torque T_N Nm	T_l/T_N	T_b/T_N	Moment of inertia J = 1/4 GD²kgm²	Weight kg	Sound pressure Level L_{PA} dB
1500 r/min = 4 poles				**400 V 50 Hz**				**CENELEC-design**							
0.25	M3BP 71MA 4	3GBP072321-••B	1365	68,3	70,7	69,6	0,81	0,63	3,5	1,74	1,9	2,0	0,00074	10	45
0.37	M3BP 71MB 4	3GBP072322-••B	1380	70,9	73,2	73,4	0,83	0,87	4,6	2,5	1,6	2,1	0,00088	11	45
0.55	M3BP 80MA 4	3GBP082321-••B	1415	70,0	69,2	64,7	0,73	1,44	5,0	3,7	2,0	2,8	0,00144	15	45
0.75	M3BP 80MD 4	3GBP082324-••B	1430	81,0	81,0	78,2	0,73	1,82	5,3	5	2,7	3,2	0,00205	17	50
1.1	M3BP 90SLB 4	3GBP092322-••B	1435	83,6	84,1	82,4	0,80	2,36	6,5	7,3	2,4	3,4	0,0044	25	50
1.5	M3BP 90SLD 4	3GBP092325-••B	1430	84,3	85,1	83,9	0,83	3	6,3	10	2,7	3,4	0,0053	27	56
2.2	M3BP 100LC 4	3GBP102323-••B	1450	85,9	85,1	83,4	0,78	4,6	7,7	14,5	2,7	4,1	0,00948	36	56
3	M3BP 100LD 4	3GBP102324-••B	1450	86,8	86,9	85,3	0,79	6,1	7,7	19,8	2,9	3,4	0,011	38	58
4	M3BP 112MB 4	3GBP112322-••B	1440	86,8	87,7	87,3	0,82	7,94	7,0	26,5	2,5	2,9	0,0125	44	59
5.5	M3BP 132SMB 4	3GBP132322-••B	1460	89,0	89,8	88,9	0,80	10,8	6,7	36	2,2	3,2	0,0328	70	67
7.5	M3BP 132SMC 4	3GBP132323-••B	1450	89,3	90,1	90,0	0,81	14,5	7,2	49,4	2,5	3,5	0,0366	73	64
11	M3BP 160MLA 4	3GBP162410-••G	1466	90,4	91,6	91,3	0,84	20,9	6,8	71,6	2,2	2,8	0,081	135	62
15	M3BP 160MLB 4	3GBP162420-••G	1470	91,4	92,3	92,2	0,83	28,5	7,1	97,4	2,6	3,0	0,099	165	62
18.5	M3BP 180MLA 4	3GBP182410-••G	1477	91,9	92,8	92,6	0,84	34,5	7,2	119	2,6	2,9	0,166	205	62
22	M3BP 180MLB 4	3GBP182420-••G	1475	92,3	93,3	93,2	0,84	40,9	7,3	142	2,6	3,0	0,195	222	62
30	M3BP 200MLA 4	3GBP202410-••G	1480	93,2	94,0	93,7	0,84	55,3	7,4	193	2,8	3,0	0,309	291	63
37	M3BP 225SMA 4	3GBP222210-••G	1479	93,4	93,9	93,4	0,84	68	7,1	238	2,6	2,9	0,356	324	66
45	M3BP 225SMB 4	3GBP222220-••G	1480	93,9	94,3	93,9	0,85	81,3	7,5	290	2,8	3,2	0,44	356	66
55	M3BP 250SMA 4	3GBP252210-••G	1480	94,4	94,9	94,6	0,85	98,9	7,0	354	2,6	2,9	0,765	414	67
75	M3BP 280SMA 4	3GBP282210-••G	1484	94,5	94,7	94,4	0,85	134	6,9	482	2,5	2,8	1,25	625	68
90	M3BP 280SMB 4	3GBP282220-••G	1483	94,7	95,0	94,5	0,85	160	7,2	579	2,5	2,7	1,5	665	68
110	M3BP 315SMA 4	3GBP312210-••G	1487	95,1	95,1	94,3	0,86	194	7,2	706	2,3	2,8	2,3	900	70
132	M3BP 315SMB 4	3GBP312220-••G	1487	95,4	95,4	94,7	0,86	232	7,1	847	2,3	2,7	2,6	960	70
160	M3BP 315SMC 4	3GBP312230-••G	1487	95,3	95,3	94,8	0,85	284	7,2	1027	2,4	2,9	2,9	1000	70
200	M3BP 315MLA 4	3GBP312410-••G	1486	95,6	95,6	95,3	0,86	351	7,2	1285	2,5	2,9	3,5	1160	70
250	M3BP 355SMA 4	3GBP352210-••G	1488	95,9	96,0	95,5	0,85	442	7,1	1604	2,3	2,7	5,9	1610	74
315	M3BP 355SMB 4	3GBP352220-••G	1488	95,9	96,2	95,8	0,86	550	7,3	2021	2,3	2,8	6,9	1780	74
355	M3BP 355SMC 4	3GBP352230-••G	1487	95,9	96,2	95,9	0,87	614	6,8	2279	2,4	2,7	7,2	1820	78
400	M3BP 355MLA 4	3GBP352410-••G	1489	96,3	96,3	95,9	0,85	705	6,8	2565	2,3	2,6	8,4	2140	78
450	M3BP 355MLB 4	3GBP352420-••G	1490	96,4	96,5	96,1	0,86	780	6,9	2884	2,3	2,9	8,4	2140	78
500	M3BP 355LKA 4	3GBP352810-••G	1490	97,0	97,0	96,5	0,86	865	6,8	3204	2,0	3,0	10	2500	78
560 [1]	M3BP 355LKB 4	3GBP352820-••G	1490	96,9	96,9	96,5	0,85	981	7,2	3588	2,6	2,7	10,6	2600	78
560 [1]	M3BP 400LA 4	3GBP402510-••G	1491	96,8	96,8	96,3	0,85	982	7,4	3586	2,4	2,8	15	3200	78
630	M3BP 400LB 4	3GBP402520-••G	1491	97,0	97,0	96,5	0,87	1077	7,6	4034	2,2	2,9	16	3300	78
710 [1]	M3BP 400LC 4	3GBP402530-••G	1491	97,1	97,1	96,7	0,86	1227	7,6	4547	2,4	3,0	17	3400	78
800	M3BP 450LA 4	3GBP452510-••G	1491	96,9	96,9	96,4	0,86	1396	7,0	5121	1,3	2,8	23	4050	85
900	M3BP 450LB 4	3GBP452520-••G	1492	97,1	97,0	96,5	0,86	1573	7,0	5761	1,3	2,8	25	4350	85
1000 [1]	M3BP 450LC 4	3GBP452530-••G	1491	97,2	97,2	96,7	0,86	1724	6,8	6404	1,3	2,7	30	4700	85

[1] Temperature rise class F

Technical data, 400 V 50 Hz

IE2 cast iron motors

IP 55 - IC 411 - Insulation class F, temperature rise class B
IE2 efficiency class according to IEC 60034-30-1; 2014

Output kW		Motor type	Product code	Speed r/min	Efficiency IEC 60034-30-1; 2014 Full load 100%	3/4 load 75%	1/2 load 50%	Power factor Cosφ	Current I_N A	I_s/I_N	Torque T_N Nm	T_l/T_N	T_b/T_N	Moment of inertia J = 1/4 GD²kgm²	Weight kg	Sound pressure Level L_{PA} dB
1500 r/min = 4 poles					**400 V 50 Hz**				**High-output design**							
18.5		M3BP 160MLC 4	3GBP162430-••G	1469	91,4	91,9	91,7	0,84	34,7	7,6	120	3,0	3,2	0,11	173	62
22	1)	M3BP 160MLD 4	3GBP162440-••G	1466	91,6	92,4	92,5	0,86	40,8	6,9	143	2,5	2,9	0,125	187	62
30	1)	M3BP 180MLC 4	3GBP182430-••G	1474	92,3	92,8	92,7	0,83	56,5	7,3	194	2,7	2,9	0,217	235	62
37		M3BP 200MLB 4	3GBP202420-••G	1479	93,4	94,4	94,4	0,85	67,2	7,1	238	2,6	2,9	0,343	307	63
45	1)	M3BP 200MLC 4	3GBP202430-••G	1479	93,6	94,4	94,2	0,83	83,6	7,5	290	2,9	3,2	0,366	319	63
55		M3BP 225SMC 4	3GBP222230-••G	1478	94,0	94,6	94,4	0,85	99,3	7,4	355	2,9	3,1	0,474	370	66
64		M3BP 225SMD 4	3GBP222240-••G	1480	94,2	94,6	94,1	0,85	115	8,2	412	3,3	3,3	0,542	399	66
75	1)	M3BP 250SMB 4	3GBP252220-••G	1478	94,4	95,1	94,8	0,85	134	7,3	484	2,8	3,1	0,866	450	67
90	1)	M3BP 250SMC 4	3GBP252230-••G	1478	94,6	95,3	95,0	0,84	163	7,4	581	3,1	3,3	0,941	478	67
110		M3BP 280SMC 4	3GBP282230-••G	1485	95,1	95,4	95,1	0,86	193	7,6	707	3,0	3,0	1,85	725	68
132		M3BP 280MLA 4	3GBP282410-••G	1483	95,3	95,5	95,1	0,86	232	7,0	849	2,7	2,8	2,3	840	75
160		M3BP 280MLB 4	3GBP282420-••G	1484	95,6	95,9	95,7	0,85	284	7,4	1029	2,9	2,9	2,5	890	75
250		M3BP 315LKA 4	3GBP312810-••G	1487	95,7	95,8	95,2	0,85	443	7,4	1605	2,5	2,9	4,4	1410	78
280		M3BP 315LKB 4	3GBP312820-••G	1487	95,8	95,9	95,4	0,87	491	7,6	1798	2,6	3,0	5	1520	78
315		M3BP 315LKC 4	3GBP312830-••G	1488	95,8	95,9	95,3	0,86	559	7,8	2021	2,6	3,2	5,5	1600	78

1) Temperature rise class F

Technical data, 400 V 50 Hz

IE2 cast iron motors

IP 55 - IC 411 - Insulation class F, temperature rise class B
IE2 efficiency class according to IEC 60034-30-1; 2014

Output kW	Motor type	Product code	Speed r/min	Efficiency IEC 60034-30-1; 2014 Full load 100%	3/4 load 75%	1/2 load 50%	Power factor Cosφ	Current I_N A	I_s/I_N	Torque T_N Nm	T_l/T_N	T_b/T_N	Moment of inertia J = 1/4 GD²kgm²	Weight kg	Sound pressure Level L_{PA} dB
1000 r/min = 6 poles				**400 V 50 Hz**				**CENELEC-design**							
0.18	M3BP 71MA 6	3GBP073321-••B	900	63,7	63,8	59,0	0,71	0,57	3,1	1,91	2,0	2,1	0,00089	10	42
0.25	M3BP 71MB 6	3GBP073322-••B	915	67,2	65,5	59,5	0,69	0,77	3,7	2,6	2,6	2,7	0,0011	12	42
0.37	M3BP 80MA 6	3GBP083321-••B	925	71,0	70,0	65,0	0,69	1,09	4,1	3,8	2,4	2,5	0,00187	15	47
0.55	M3BP 80MB 6	3GBP083322-••B	920	73,1	74,2	71,9	0,71	1,51	3,8	5,7	1,8	2,2	0,00239	17	47
0.75	M3BP 90SLC 6	3GBP093323-••B	960	76,3	74,7	69,5	0,58	2,3	4,5	7,4	2,4	3,1	0,00491	25	44
1.1	M3BP 90SLE 6	3GBP093324-••B	930	78,2	78,7	76,5	0,66	3	4,0	11,2	1,9	2,3	0,0054	28	44
1.5	M3BP 100L 6	3GBP103322-••B	950	81,3	82,1	80,7	0,69	3,7	4,3	15	1,5	2,7	0,00873	37	49
2.2	M3BP 112MB 6	3GBP113322-••B	950	82,5	83,7	81,6	0,69	5,5	4,4	22,1	1,7	2,3	0,0125	44	66
3	M3BP 132SMB 6	3GBP133321-••B	975	85,3	84,2	81,2	0,63	8	5,5	29,4	1,8	2,9	0,0334	69	57
4	M3BP 132SMC 6	3GBP133322-••B	960	84,9	85,4	83,9	0,68	10	4,6	39,7	1,5	2,2	0,0334	69	57
5.5	M3BP 132SMF 6	3GBP133324-••B	965	86,1	86,6	85,5	0,71	12,9	5,1	54,4	2,0	2,3	0,0487	86	57
7.5	M3BP 160MLA 6	3GBP163410-••G	975	88,5	89,9	89,7	0,79	15,4	7,4	73,4	1,7	3,2	0,087	134	59
11	M3BP 160MLB 6	3GBP163420-••G	972	89,3	90,6	90,5	0,79	22,5	7,5	108	1,9	2,9	0,114	172	59
15	M3BP 180MLA 6	3GBP183410-••G	977	90,2	90,6	90,0	0,76	31,5	5,8	146	1,8	2,7	0,168	207	59
18.5	M3BP 200MLA 6	3GBP203410-••G	988	91,6	92,2	91,7	0,80	36,4	6,7	178	2,3	2,9	0,382	269	63
22	M3BP 200MLB 6	3GBP203420-••G	987	92,0	92,9	92,7	0,82	42	6,6	212	2,2	2,8	0,448	291	63
30	M3BP 225SMA 6	3GBP223210-••G	986	92,6	93,3	92,8	0,83	56,2	7,0	290	2,6	2,9	0,663	349	63
37	M3BP 250SMA 6	3GBP253210-••G	989	93,1	93,8	93,4	0,82	69,9	6,8	357	2,4	2,7	1,13	395	63
45	M3BP 280SMA 6	3GBP283210-••G	990	93,4	93,8	93,5	0,83	83,8	7,0	434	2,5	2,5	1,85	605	66
55	M3BP 280SMB 6	3GBP283220-••G	990	93,8	94,2	93,9	0,84	100	7,0	530	2,7	2,6	2,2	645	66
75	M3BP 315SMA 6	3GBP313210-••G	992	94,4	94,4	93,5	0,82	139	7,4	721	2,4	2,8	3,2	830	70
90	M3BP 315SMB 6	3GBP313220-••G	992	94,8	94,7	94,1	0,84	166	7,5	866	2,4	2,8	4,1	930	70
110	M3BP 315SMC 6	3GBP313230-••G	991	95,0	95,0	94,6	0,83	201	7,4	1059	2,5	2,9	4,9	1000	70
132	M3BP 315MLA 6	3GBP313410-••G	991	95,3	95,4	94,9	0,83	240	7,5	1271	2,7	3,0	5,8	1150	68
160	M3BP 355SMA 6	3GBP353210-••G	993	95,4	95,6	95,2	0,83	291	7,0	1538	2,0	2,6	7,9	1520	75
200	M3BP 355SMB 6	3GBP353220-••G	993	95,7	95,9	95,7	0,83	364	7,2	1923	2,2	2,7	9,7	1680	75
250	M3BP 355SMC 6	3GBP353230-••G	993	95,7	95,8	95,4	0,82	460	7,4	2404	2,6	2,9	11,3	1820	75
315	M3BP 355MLB 6	3GBP353420-••G	992	95,7	96,0	95,5	0,83	570	7,0	3032	2,5	2,7	13,5	2180	75
355	M3BP 355LKA 6	3GBP353810-••G	992	95,7	95,9	95,4	0,81	658	7,6	3417	2,7	2,9	15,5	2500	75
400	M3BP 400LA 6	3GBP403510-••G	993	96,2	96,2	95,6	0,82	731	7,1	3846	2,3	2,7	17	2900	76
400	M3BP 400LKA 6	3GBP403810-••G	993	96,2	96,2	95,6	0,82	731	7,1	3846	2,3	2,7	17	2900	76
450	M3BP 400LB 6	3GBP403520-••G	994	96,6	96,6	96,1	0,82	819	7,4	4323	2,4	2,8	20,5	3150	76
500	M3BP 400LC 6	3GBP403530-••G	993	96,6	96,5	96,1	0,83	891	7,2	4809	2,5	2,7	22	3300	76
560	M3BP 400LD 6	3GBP403540-••G	993	96,9	96,9	96,4	0,85	984	7,4	5386	2,4	2,8	24	3400	77
630	M3BP 450LA 6	3GBP453510-••G	994	96,7	96,7	96,3	0,84	1127	6,5	6053	1,1	2,5	31	4150	81
710	M3BP 450LB 6	3GBP453520-••G	995	96,9	97,0	96,5	0,85	1244	7,0	6814	1,3	2,5	37	4500	81
800 [1]	M3BP 450LC 6	3GBP453530-••G	995	96,9	96,9	96,4	0,84	1415	7,2	7677	1,3	2,7	41	4800	81

[1] Temperature rise class F

Technical data, 400 V 50 Hz

IE2 cast iron motors

IP 55 - IC 411 - Insulation class F, temperature rise class B
IE2 efficiency class according to IEC 60034-30-1; 2014

Output kW	Motor type	Product code	Speed r/min	Efficiency IEC 60034-30-1; 2014 Full load 100%	3/4 load 75%	1/2 load 50%	Power factor Cosφ	Current I_N A	I_s/I_N	Torque T_N Nm	T_l/T_N	T_b/T_N	Moment of inertia J = 1/4 GD²kgm²	Weight kg	Sound pressure Level L_{PA} dB
1000 r/min = 6 poles				**400 V 50 Hz**				**High-output design**							
15	M3BP 160MLC 6	3GBP163430-••G	971	89,7	90,5	90,2	0,77	31,3	7,3	147	1,8	3,6	0,131	185	59
18.5	M3BP 180MLB 6	3GBP183420-••G	975	90,7	92,0	92,0	0,79	37,2	5,8	181	1,7	2,7	0,198	221	59
30 [1]	M3BP 200MLC 6	3GBP203430-••G	985	92,0	93,1	92,8	0,83	56,7	6,9	290	2,3	2,8	0,531	318	63
37	M3BP 225SMB 6	3GBP223220-••G	985	93,1	94,0	94,0	0,83	69,1	6,6	358	2,3	2,6	0,821	393	63
45 [1]	M3BP 225SMC 6	3GBP223230-••G	984	92,7	93,3	93,3	0,83	84,4	6,4	436	2,3	2,6	0,821	393	63
45	M3BP 250SMB 6	3GBP253220-••G	989	93,4	94,1	93,9	0,83	83,7	7,0	434	2,5	2,7	1,37	441	63
55	M3BP 250SMC 6	3GBP253230-••G	988	93,2	93,7	93,6	0,84	101	7,1	531	2,6	2,8	1,5	468	63
75	M3BP 280SMC 6	3GBP283230-••G	990	94,2	94,7	94,5	0,84	137	7,3	723	2,8	2,7	2,85	725	66
90	M3BP 280MLA 6	3GBP283410-••G	990	94,1	94,3	93,7	0,81	170	7,1	868	2,4	2,5	3,1	840	70
110	M3BP 280MLB 6	3GBP283420-••G	990	94,5	94,8	94,4	0,82	205	7,5	1061	2,7	2,6	4,1	890	70
160	M3BP 315LKA 6	3GBP313810-••G	992	95,3	95,3	94,7	0,83	291	7,5	1540	2,6	2,8	7,3	1410	74
180	M3BP 315LKB 6	3GBP313820-••G	992	95,3	95,4	94,8	0,83	328	7,4	1732	2,6	2,8	8,3	1520	74
200	M3BP 315LKC 6	3GBP313830-••G	989	95,4	95,6	95,3	0,85	360	6,8	1931	2,5	2,6	9,2	1600	74

[1] Temperature rise class F

Technical data, 400 V 50 Hz

IE2 cast iron motors

IP 55 - IC 411 - Insulation class F, temperature rise class B
Efficiency class according to IEC 60034-30-1; 2014

Output kW	Motor type	Product code	Speed r/min	Efficiency IEC 60034-30-1; 2014 Full load 100%	3/4 load 75%	1/2 load 50%	Power factor Cosφ	Current I_N A	I_s/I_N	Torque T_N Nm	T_l/T_N	T_b/T_N	Moment of inertia J = 1/4 GD²kgm²	Weight kg	Sound pressure Level L_{PA} dB
750 r/min = 8 poles				**400 V 50 Hz**				**CENELEC-design**							
0.09	M3BP 71MA 8	3GBP074101-••B	660	49,4	46,4	39,7	0,60	0,44	2,7	1,3	2,0	2,5	0,00089	11	40
0.12	M3BP 71MB 8	3GBP074102-••B	670	51,5	47,6	40,0	0,56	0,6	2,7	1,7	2,0	2,5	0,0011	12	43
0.18	M3BP 80MA 8	3GBP084101-••B	700	57,4	53,7	46,1	0,62	0,78	3,2	2,5	2,1	2,8	0,00187	15	45
0.25	M3BP 80MB 8	3GBP084102-••B	680	61,5	61,3	53,5	0,65	0,94	3,1	3,5	1,9	2,6	0,00239	17	50
0.37	M3BP 90SLB 8	3GBP094102-••B	705	66,3	64,0	57,0	0,54	1,43	2,8	5	1,9	2,5	0,00444	24	50
0.55	M3BP 90SLC 8	3GBP094103-••B	655	61,8	65,6	65,2	0,67	1,92	2,6	8	1,4	1,9	0,00491	25	53
0.75	M3BP 100LA 8	3GBP104101-••B	710	74,0	72,3	67,1	0,61	2,48	3,7	10,1	1,8	2,6	0,0072	30	46
1.1	M3BP 100LB 8	3GBP104102-••B	695	76,0	76,4	74,5	0,66	3,12	3,6	15,1	1,6	2,3	0,00871	30	53
1.5	M3BP 112M 8	3GBP114101-••B	690	74,4	75,9	74,1	0,74	4,11	3,5	20,9	1,9	2,6	0,0106	39	55
2.2	M3BP 132SMA 8	3GBP134101-••B	715	79,7	79,5	77,1	0,66	6,51	4,7	29,2	1,6	2,8	0,0334	70	56
3	M3BP 132SMB 8	3GBP134102-••B	715	79,9	79,7	76,6	0,64	8,5	4,7	39,7	1,7	2,8	0,04	75	58
4	M3BP 160MLA 8	3GBP164410-••G	728	84,0	85,1	83,6	0,67	10,2	5,4	52,4	1,5	2,6	0,068	120	59
5.5	M3BP 160MLB 8	3GBP164420-••G	726	84,6	85,9	84,8	0,67	13,9	5,6	72,3	1,4	2,6	0,085	134	59
7.5	M3BP 160MLC 8	3GBP164430-••G	727	86,0	87,3	86,5	0,65	19,3	4,7	98,5	1,5	2,8	0,132	184	59
11	M3BP 180MLA 8	3GBP184410-••G	731	86,9	87,6	86,7	0,67	27,3	4,4	143	1,8	2,6	0,214	233	59
15 [1]	M3BP 200MLA 8	3GBP204410-••G	737	89,5	90,8	90,3	0,74	32,4	5,3	194	2,0	2,4	0,45	290	60
18.5	M3BP 225SMA 8	3GBP224210-••G	739	90,0	91,1	90,6	0,73	40,1	5,2	239	2,0	2,3	0,669	350	63
22	M3BP 225SMB 8	3GBP224220-••G	738	90,5	91,4	91,0	0,74	46,8	5,5	284	2,0	2,3	0,722	363	63
30	M3BP 250SMA 8	3GBP254031-••G	742	91,2	91,8	91,1	0,71	66	5,8	386	2,6	2,4	1,4	440	63
30	M3BP 250SMA 8	3GBP254210-••G	742	91,2	91,8	91,1	0,71	66	5,8	386	2,6	2,4	1,4	440	63
37	M3BP 280SMA 8	3GBP284210-••G	741	91,7	92,0	91,2	0,79	72,6	7,3	476	1,7	3,0	1,85	605	65
45	M3BP 280SMB 8	3GBP284220-••G	741	92,1	92,3	91,7	0,78	89,2	7,6	579	1,8	3,1	2,2	645	65
55	M3BP 315SMA 8	3GBP314210-••G	742	92,4	93,0	92,4	0,79	106	7,1	707	1,6	2,7	3,2	830	62
75	M3BP 315SMB 8	3GBP314220-••G	741	93,0	93,2	93,0	0,82	146	7,1	966	1,7	2,7	4,1	930	62
90	M3BP 315SMC 8	3GBP314230-••G	741	93,3	93,7	93,3	0,82	170	7,4	1159	1,8	2,7	4,9	1000	64
110	M3BP 315MLA 8	3GBP314410-••G	740	93,6	93,9	94,0	0,83	211	7,3	1419	1,8	2,7	5,8	1150	72
132	M3BP 355SMA 8	3GBP354210-••G	744	93,9	93,8	93,3	0,80	256	7,5	1694	1,5	2,6	7,9	1520	69
160	M3BP 355SMB 8	3GBP354220-••G	744	94,3	94,3	93,8	0,77	293	7,6	1926	1,6	2,6	9,7	1680	69
200	M3BP 355SMC 8	3GBP354230-••G	742	94,5	95,0	94,8	0,79	385	7,4	2576	1,6	2,6	11,3	1820	69
250	M3BP 355MLB 8	3GBP354420-••G	743	94,5	94,7	94,1	0,80	472	7,5	3213	1,6	2,7	13,5	2180	72
315	M3BP 400LA 8	3GBP404510-••G	744	96,1	96,0	95,6	0,81	592	7,0	4043	1,2	2,6	17	2900	71
315 [1]	M3BP 355LKB 8	3GBP354820-••G	742	95,5	95,7	95,2	0,80	595	7,9	4053	1,7	2,7	16,5	2600	75
355	M3BP 400LB 8	3GBP404520-••G	743	96,2	96,3	96,1	0,83	641	6,8	4562	1,2	2,5	21	3200	71
400	M3BP 400LC 8	3GBP404530-••G	744	96,0	96,3	95,8	0,82	735	6,0	5134	1,3	2,7	24	3400	71
450	M3BP 450LA 8	3GBP454510-••G	744	96,2	96,5	96,2	0,83	813	6,0	5775	1,0	2,5	26	3750	80
500	M3BP 450LB 8	3GBP454520-••G	744	96,3	96,4	96,2	0,83	902	6,4	6417	1,0	2,6	29	4000	80
560	M3BP 450LC 8	3GBP454530-••G	744	96,4	96,5	96,1	0,82	1038	7,0	7188	1,2	2,9	35	4350	80
630 [1]	M3BP 450LD 8	3GBP454540-••G	745	96,6	96,7	96,2	0,81	1162	7,6	8075	1,3	3,2	41	4800	80

[1] Temperature rise class F

Technical data, 400 V 50 Hz

IE2 cast iron motors

IP 55 - IC 411 - Insulation class F, temperature rise class B
Efficiency class according to IEC 60034-30-1; 2014

Output kW	Motor type	Product code	Speed r/min	Efficiency IEC 60034-30-1; 2014 Full load 100%	3/4 load 75%	1/2 load 50%	Power factor Cosφ	Current I_N A	I_s/I_N	Torque T_N Nm	T_l/T_N	T_b/T_N	Moment of inertia J = 1/4 GD^2kgm²	Weight kg	Sound pressure Level L_{PA} dB
750 r/min = 8 poles				**400 V 50 Hz**				**High-output design**							
18.5	M3BP 200MLB 8	3GBP204420-••G	739	90,0	90,8	90,2	0,74	40	5,4	239	2,1	2,3	0,53	318	60
30	M3BP 225SMC 8	3GBP224230-••G	737	91,2	92,3	92,1	0,73	64,7	5,6	388	2,3	2,4	0,828	393	63
37	M3BP 250SMB 8	3GBP254220-••G	740	91,7	92,8	92,5	0,73	78,9	5,4	477	2,6	2,3	1,51	468	63
45 [1]	M3BP 250SMC 8	3GBP254230-••G	738	92,1	93,4	93,4	0,74	95,1	5,6	582	2,3	2,4	1,51	468	63
55	M3BP 280SMC 8	3GBP284230-••G	741	93,4	93,7	93,6	0,80	107	7,9	708	1,9	3,1	2,85	725	65
75	M3BP 280MLB 8	3GBP284420-••G	739	93,7	93,9	93,3	0,80	144	6,7	969	1,7	2,6	4,1	890	72
132	M3BP 315LKA 8	3GBP314810-••G	740	94,1	94,4	94,2	0,83	243	7,3	1703	1,8	2,6	7,3	1410	74
150 [1]	M3BP 315LKB 8	3GBP314820-••G	741	94,1	94,7	94,6	0,83	278	7,7	1938	1,9	2,7	8,3	1520	74
160 [1]	M3BP 315LKC 8	3GBP314830-••G	739	94,2	94,7	94,7	0,83	297	7,7	2068	1,9	2,8	9,2	1600	74

[1] Temperature rise class F

Technical data, 400 V 50 Hz

IE2 cast iron motors

IP 55 - IC 411 - Insulation class F, temperature rise class B
efficiency class according to IEC 60034-30-1; 2014

Output kW	Motor type	Product code	Speed r/min	Efficiency IEC 60034-30-1; 2014 Full load 100%	3/4 load 75%	1/2 load 50%	Power factor Cosφ	Current I_N A	I_s/I_N	Torque T_N Nm	T_l/T_N	T_b/T_N	Moment of inertia J = 1/4 GD²kgm²	Weight kg	Sound pressure Level L_{PA} dB
600 r/min = 10 poles				**400 V 50 Hz**				**CENELEC-design**							
15	M3BP 200MLB 10	3GBP205420-••G	587	88,2	88,4	86,9	0,71	34,5	5,3	244	1,7	2,4	0,54	305	61
37	M3BP 280SMB 10	3GBP285220-••G	593	92,5	92,3	90,9	0,73	79	6,6	595	1,6	3,0	2,2	645	60
45	M3BP 280SMC 10	3GBP285230-••G	592	93,0	92,9	91,7	0,75	93,1	6,7	725	1,6	2,8	2,85	725	60
55	M3BP 315SMB 10	3GBP315220-••G	594	93,8	93,8	92,9	0,78	108	6,7	884	1,6	2,7	4,1	930	70
75	M3BP 315SMC 10	3GBP315230-••G	593	93,6	93,7	92,8	0,78	148	6,6	1207	1,5	2,8	4,9	1000	70
90	M3BP 315MLA 10	3GBP315410-••G	593	93,7	93,8	93,0	0,78	177	6,6	1449	1,7	2,7	5,8	1150	70
110	M3BP 355SMA 10	3GBP355210-••G	595	94,5	94,5	93,6	0,76	221	6,6	1765	1,3	2,5	7,9	1520	73
132	M3BP 355SMB 10	3GBP355220-••G	594	94,8	94,9	94,2	0,79	254	6,6	2122	1,3	2,4	9,7	1680	73
160	M3BP 355SMC 10	3GBP355230-••G	594	94,8	94,9	94,2	0,77	316	6,9	2572	1,4	2,5	11,3	1820	76
200	M3BP 355MLB 10	3GBP355420-••G	594	95,0	95,1	94,5	0,78	389	6,5	3215	1,4	2,4	13,5	2180	77
250 [1)]	M3BP 355LKB 10	3GBP355820-••G	593	95,1	95,3	94,8	0,78	486	6,3	4025	1,4	2,3	16,5	2600	79
250	M3BP 400LB 10	3GBP405520-••G	595	95,3	95,3	94,5	0,74	511	6,2	4012	1,3	2,3	20	3100	79
315	M3BP 400LC 10	3GBP405530-••G	595	95,4	95,4	94,7	0,74	644	6,2	5055	1,3	2,3	24	3400	79
355	M3BP 450LA 10	3GBP455510-••G	596	95,9	95,9	95,2	0,72	742	5,8	5687	1,1	2,2	31	4050	82
400	M3BP 450LB 10	3GBP455520-••G	596	95,9	95,9	95,1	0,72	836	5,7	6408	1,0	2,1	34	4250	82
450	M3BP 450LC 10	3GBP455530-••G	596	96,1	96,1	95,4	0,73	925	5,8	7210	1,0	2,1	38	4550	82
500 [1)]	M3BP 450LD 10	3GBP455540-••G	596	96,1	96,1	95,4	0,71	1057	5,9	8011	1,1	2,2	42	4800	82

[1)] Temperature rise class F

Output kW	Motor type	Product code	Speed r/min	Efficiency IEC 60034-30-1; 2014 Full load 100%	3/4 load 75%	1/2 load 50%	Power factor Cosφ	Current I_N A	I_s/I_N	Torque T_N Nm	T_l/T_N	T_b/T_N	Moment of inertia J = 1/4 GD²kgm²	Weight kg	Sound pressure Level L_{PA} dB
500 r/min = 12 poles				**400 V 50 Hz**				**CENELEC-design**							
30	M3BP 280SMB 12	3GBP286220-••G	493	90,2	89,5	86,9	0,59	81,3	5,8	581	1,9	3,0	2,2	645	71
37	M3BP 280SMC 12	3GBP286230-••G	493	90,6	89,8	87,2	0,58	101	6,3	716	2,0	3,2	2,85	725	71
45	M3BP 315SMB 12	3GBP316220-••G	494	92,8	92,9	92,0	0,76	92	6,5	869	1,6	2,6	4,1	930	71
55	M3BP 315SMC 12	3GBP316230-••G	493	93,0	93,2	92,4	0,77	110	6,5	1065	1,6	2,6	4,9	1000	71
75	M3BP 315MLA 12	3GBP316410-••G	493	93,2	93,4	92,8	0,76	152	6,3	1452	1,5	2,5	5,8	1150	71
90	M3BP 355SMA 12	3GBP356210-••G	495	93,5	93,5	92,5	0,72	192	5,7	1736	1,3	2,4	7,9	1520	75
110	M3BP 355SMB 12	3GBP356220-••G	495	93,8	93,8	92,7	0,71	238	6,0	2122	1,4	2,5	9,7	1680	75
132	M3BP 355SMC 12	3GBP356230-••G	495	93,9	93,9	92,9	0,71	285	6,0	2546	1,4	2,5	11,3	1820	77
160	M3BP 355MLB 12	3GBP356420-••G	494	93,8	94,0	93,3	0,74	332	5,7	3092	1,3	2,4	13,5	2180	77
200 [1)]	M3BP 355LKB 12	3GBP356820-••G	494	93,9	94,1	93,4	0,73	421	5,8	3866	1,4	2,4	16,5	2600	79
200	M3BP 400LB 12	3GBP406520-••G	495	95,0	95,0	94,3	0,79	384	5,4	3858	1,1	2,2	20	3100	82
250	M3BP 400LC 12	3GBP406530-••G	495	95,2	95,2	94,5	0,79	479	5,7	4822	1,1	2,2	24	3400	82
315	M3BP 450LB 12	3GBP456520-••G	496	95,6	95,6	94,8	0,76	625	5,5	6064	1,0	2,1	34	4300	82
355	M3BP 450LC 12	3GBP456530-••G	495	95,6	95,6	95,0	0,76	705	5,3	6848	1,0	2,0	38	4550	82
400 [1)]	M3BP 450LD 12	3GBP456540-••G	495	95,7	95,8	95,2	0,77	783	5,3	7716	1,0	2,0	42	4800	82

[1)] Temperature rise class F

Technical data, 460 V 60 Hz

IE2 cast iron motors

IP 55 - IC 411 - Insulation class F, temperature rise class B
IE2 efficiency class according to IEC 60034-30-1; 2014

Output kW		Motor type	Product code	Speed r/min	Efficiency IEC 60034-30-1; 2014 Full load 100%	3/4 load 75%	1/2 load 50%	Power factor Cosφ	Current I_N A	I_s/I_N	Torque T_N Nm	T_l/T_N	T_b/T_N	Moment of inertia J = 1/4 GD²kgm²	Weight kg	Sound pressure Level L_{PA} dB
3600 r/min = 2 poles					**460 V 60 Hz**				**CENELEC-design**							
0.37		M3BP 71MA 2	3GBP071321-••B	3389	76,7	76,4	73,2	0,8	0,78	5,5	1,03	2,6	2,9	0,00039	11	61
0.55		M3BP 71MB 2	3GBP071322-••B	3439	79,4	81,1	79,9	0,83	1,04	6	1,52	3	3,5	0,00051	11	59
0.75		M3BP 80MB 2	3GBP081322-••B	3510	80,3	78,3	73,6	0,72	1,62	9,1	2,04	4,9	5,2	0,001	16	60
1.1		M3BP 80MC 2	3GBP081323-••B	3490	82,9	81,8	78,4	0,8	2,12	7,5	3	4,3	5,5	0,0012	18	63
1.5		M3BP 90SLB 2	3GBP091322-••B	3505	84,4	84	81,6	0,87	2,57	7,5	4,07	2,8	3,1	0,00254	24	72
2.2		M3BP 90SLC 2	3GBP091323-••B	3500	86	86	84,2	0,88	3,58	7,9	5,98	1,7	2,9	0,0028	25	67
3		M3BP 100LB 2	3GBP101322-••B	3530	87	85,7	82,4	0,87	5,1	9,1	8	3,4	4,2	0,00528	36	71
4		M3BP 112MB 2	3GBP111322-••B	3510	85	84,4	82,1	0,89	6,6	9,5	10,84	3,2	3,8	0,00575	37	73
5.5		M3BP 132SMB 2	3GBP131322-••B	3485	89,2	88,6	86,3	0,87	8,6	7,9	15,01	2,6	3,1	0,0128	68	73
7.5		M3BP 132SMC 2	3GBP131324-••B	3505	89,5	89,1	86,8	0,88	12,1	8,9	20,48	2,5	4,4	0,0136	70	73
11		M3BP 160MLA 2	3GBP161410-••G	3547	90,9	91	89,8	0,9	16,7	8,6	29,6	2,6	3,5	0,044	127	73
15		M3BP 160MLB 2	3GBP161420-••G	3545	90,9	91,2	90	0,9	22,4	8,7	40,4	2,7	3,8	0,053	141	73
18.5		M3BP 160MLC 2	3GBP161430-••G	3543	91,6	92,1	91,3	0,92	27,2	8,7	49,8	3,1	3,8	0,063	170	73
22		M3BP 180MLA 2	3GBP181410-••G	3559	91,6	91,6	90,3	0,87	34,3	8,8	59	3	3,8	0,076	190	73
30		M3BP 200MLA 2	3GBP201410-••G	3562	92,3	92	90,4	0,9	44,9	8,7	80,4	2,8	3,4	0,178	283	76
37		M3BP 200MLB 2	3GBP201420-••G	3564	92,9	92,7	91,1	0,89	55,8	9,2	99,1	3,1	3,7	0,196	298	76
45		M3BP 225SMA 2	3GBP221210-••G	3566	93,5	93,2	91,7	0,88	68,6	7,7	120	2,6	2,7	0,244	347	78
55		M3BP 250SMA 2	3GBP251210-••G	3571	93,5	93,2	91,7	0,88	83,2	7,7	147	2,3	3	0,507	405	79
75	2) 3)	M3BP 280SMA 2	3GBP281210-••G	3579	93	92,4	90,5	0,87	116	8,5	199	2,1	3,3	0,8	625	77
90	2) 3)	M3BP 280SMB 2	3GBP281220-••G	3578	93,7	93,2	91,7	0,89	135	8,3	239	2,2	3,2	0,9	665	82
110	2) 3)	M3BP 315SMA 2	3GBP311210-••G	3583	93,3	92,4	90,3	0,85	173	8,2	292	2,2	3,6	1,2	940	83
132	2) 3)	M3BP 315SMB 2	3GBP311220-••G	3584	94,1	93,5	91,7	0,88	200	8,3	351	2,2	3,3	1,4	940	83
160	2) 3)	M3BP 315SMC 2	3GBP311230-••G	3583	94,6	94,1	92,6	0,89	239	8,4	425	2,4	3,3	1,7	1025	83
200	2) 3)	M3BP 315MLA 2	3GBP311410-••G	3582	95,1	94,7	93,5	0,9	293	8,7	532	2,7	3,3	2,1	1190	83
250	3)	M3BP 355SMA 2	3GBP351210-••G	3585	95,5	95	93,6	0,89	370	8,6	665	1,8	3,7	3	1600	86
315	3)	M3BP 355SMB 2	3GBP351220-••G	3582	95,6	95,3	94,1	0,89	466	7,8	839	2,2	3,3	3,4	1680	86
355	3)	M3BP 355SMC 2	3GBP351230-••G	3586	95,7	95,3	94,2	0,88	528	8,1	945	2,2	3,3	3,6	1750	88
450	1)3)	M3BP 355MLB 2	3GBP351420-••G	3585	96,6	96,3	95,4	0,9	650	8,9	1199	2,2	3,2	4,3	2080	88
500	3)	M3BP 355LKA 2	3GBP351810-••G	3584	96,7	96,5	95,7	0,9	722	9	1332,26	2,4	4,3	4,8	2320	88
560	4)	M3BP 400LA 2	3GBP401510-••G	3588	96,9	96,6	95,6	0,89	818	9	1490	2,3	3,8	7,9	2950	86
630	4)	M3BP 400LB 2	3GBP401520-••G	3588	96,9	96,8	96,7	0,89	916	8,6	1676	3	4,5	8,2	3050	86
710	4)	M3BP 400LC 2	3GBP401530-••G	3588	97,1	97	96,4	0,9	1026	8,4	1890	2,9	4	9,3	3300	86
800	4)	M3BP 450LA 2	3GBP451510-••G	3591	97,4	97,2	96,4	0,87	1188	8	2127	1,3	3,5	12,2	4000	
900	4)	M3BP 450LB 2	3GBP451520-••G	3591	96,8	96,6	95,9	0,85	1366	7,8	2393	1,5	3,4	13,5	4200	

1) Temperature rise class F
2) Efficiency class IE1
3) -3dB(A) sound pressure level reduction with unidirectional fan construction. Direction of rotation must be stated when ordering, see variant codes 044 and 045
4) Unidirectional fan construction as standard. Direction of rotation must be stated when ordering, see variant codes 044 and 045

Technical data, 460 V 60 Hz

IE2 cast iron motors

IP 55 - IC 411 - Insulation class F, temperature rise class B
IE2 efficiency class according to IEC 60034-30-1; 2014

Output kW	Motor type	Product code	Speed r/min	Efficiency IEC 60034-30-1; 2014 Full load 100%	3/4 load 75%	1/2 load 50%	Power factor Cosφ	Current I_N A	I_s/I_N	Torque T_N Nm	T_l/T_N	T_b/T_N	Moment of inertia J = 1/4 GD²kgm²	Weight kg	Sound pressure Level L_{PA} dB
3600 r/min = 2 poles				**460 V 60 Hz**				**High-output design**							
22	M3BP 160MLD 2	3GBP161440-••G	3546	91,6	92,1	91,2	0,91	32,8	9,3	59,2	3,4	4,1	0,063	170	73
27	M3BP 160MLE 2	3GBP161450-••G	3546	92,3	92,8	92,1	0,9	40,4	9,1	72,8	3,3	3,9	0,072	184	73
30	M3BP 180MLB 2	3GBP181420-••G	3558	92,3	92,4	91,7	0,89	45,4	9,2	80,5	3,1	3,8	0,092	208	73
45	M3BP 200MLC 2	3GBP201430-••G	3563	93,4	93,3	92,2	0,88	68,7	9,2	120	3,2	3,7	0,196	298	76
55	M3BP 200MLD 2	3GBP201440-••G	3560	93,5	93,7	92,6	0,89	82,2	9	147	3,1	3,7	0,217	314	76
55	M3BP 225SMB 2	3GBP221220-••G	3567	93,5	93,3	91,8	0,89	82,6	7,5	147	2,5	2,8	0,274	369	78
75	M3BP 225SMC 2	3GBP221230-••G	3573	94	93,8	92,7	0,86	116	8,7	200	3,3	3,4	0,309	396	78
75	M3BP 250SMB 2	3GBP251220-••G	3575	94	93,9	92,8	0,89	111	8,6	200	2,9	3,4	0,583	451	79
80	M3BP 225SMD 2	3GBP221240-••G	3570	94	93,8	92,7	0,88	120	8,4	213	3,1	3,2	0,329	410	78
90	M3BP 250SMC 2	3GBP251230-••G	3575	94,9	94,8	93,6	0,89	133	8,6	240	2,7	3,4	0,644	487	79

Technical data, 460 V 60 Hz

IE2 cast iron motors

IP 55 - IC 411 - Insulation class F, temperature rise class B
IE2 efficiency class according to IEC 60034-30-1; 2014

Output kW	Motor type	Product code	Speed r/min	Efficiency IEC 60034-30-1; 2014 Full load 100%	3/4 load 75%	1/2 load 50%	Power factor Cosφ	Current I_N A	I_s/I_N	Torque T_N Nm	T_l/T_N	T_b/T_N	Moment of inertia J = 1/4 GD²kgm²	Weight kg	Sound pressure Level L_{PA} dB
1800 r/min = 4 poles				**460 V 60 Hz**				**CENELEC-design**							
0.25	M3BP 71MA 4	3GBP072321-••B	1705	73,2	73,3	70,5	0,76	0,56	4,3	1,42	2,3	2,6	0,00074	10	48
0.37	M3BP 71MB 4	3GBP072322-••B	1710	75,1	74,9	71,9	0,78	0,77	5,5	2,05	1,9	2,7	0,00088	11	48
0.55	M3BP 80MA 4	3GBP082321-••B	1725	75,5	76	72,3	0,65	1,39	6,1	3,01	2,4	3,6	0,00144	15	48
0.75	M3BP 80MD 4	3GBP082324-••B	1740	82,5	81,7	78,5	0,69	1,64	6,1	4,12	3	3,8	0,00205	17	53
1.1	M3BP 90SLB 4	3GBP092322-••B	1740	85,4	85,1	82,7	0,77	2,11	7,5	6	2,7	4	0,0044	25	53
1.5	M3BP 90SLD 4	3GBP092325-••B	1740	86,1	86	84	0,81	2,74	7,8	8,2	3	4,1	0,0053	27	59
2.2	M3BP 100LC 4	3GBP102323-••B	1755	87,5	86,7	84,3	0,78	4,08	9	12	3	4,8	0,00948	36	59
3	M3BP 100LD 4	3GBP102324-••B	1755	87,6	87,2	85	0,78	5,42	9,1	16,35	3,2	4,1	0,011	38	61
4	M3BP 112MB 4	3GBP112322-••B	1745	87,7	87,6	86	0,82	6,94	8,2	21,96	2,8	3,4	0,0125	44	62
5.5	M3BP 132SMB 4	3GBP132322-••B	1765	89,9	89,6	87,5	0,79	9,64	7,6	29,8	2,4	3,6	0,0328	70	70
7.5	M3BP 132SMC 4	3GBP132323-••B	1760	90,5	90,4	88,8	0,82	12,7	8,2	40,88	2,7	4,1	0,0366	73	67
11	M3BP 160MLA 4	3GBP162410-••G	1772	91,3	91,6	90,5	0,83	18,2	7,7	59,2	2,4	3,2	0,081	135	66
15	M3BP 160MLB 4	3GBP162420-••G	1775	92,2	92,3	91,5	0,83	24,6	8	80,6	2,7	3,3	0,099	165	66
18.5	M3BP 180MLA 4	3GBP182410-••G	1781	92,5	92,8	92	0,83	30,2	8,2	99,1	2,8	3,2	0,166	205	66
22	M3BP 180MLB 4	3GBP182420-••G	1780	93,1	93,4	92,5	0,83	35,7	8,3	118	2,8	3,3	0,195	222	66
30	M3BP 200MLA 4	3GBP202410-••G	1783	93,8	94	93,1	0,83	48,3	8,4	160	3	3,3	0,309	291	67
37	M3BP 225SMA 4	3GBP222210-••G	1782	93,6	93,5	92,4	0,84	59	8,1	198	2,8	3,2	0,356	324	70
45	M3BP 225SMB 4	3GBP222220-••G	1784	94,2	94,1	93	0,85	70,5	8,6	240	2,7	3,3	0,44	356	70
55	M3BP 250SMA 4	3GBP252210-••G	1782	95	95,2	94,7	0,84	86,3	8	294	2,8	3,3	0,765	414	71
75 [2]	M3BP 280SMA 4	3GBP282210-••G	1785	94,2	94,1	93	0,85	117	7,9	400	2,7	3,1	1,25	625	72
90	M3BP 280SMB 4	3GBP282220-••G	1785	94,7	94,7	93,9	0,85	140	8,2	481	2,7	3	1,5	665	72
110 [2]	M3BP 315SMA 4	3GBP312210-••G	1788	94,5	94,2	92,9	0,86	170	8,1	587	2,4	3,1	2,3	900	74
132	M3BP 315SMB 4	3GBP312220-••G	1788	95,1	94,9	93,8	0,86	203	8	704	2,5	3	2,6	960	74
160	M3BP 315SMC 4	3GBP312230-••G	1788	95,2	95	94	0,85	249	8,2	854	2,6	3,2	2,9	1000	74
200	M3BP 315MLA 4	3GBP312410-••G	1787	95,3	95,2	94,4	0,86	307	8,2	1068	2,7	3,2	3,5	1160	74
250	M3BP 355SMA 4	3GBP352210-••G	1789	95,4	95,3	94,4	0,85	388	8	1334	2,4	3	5,9	1610	79
315	M3BP 355SMB 4	3GBP352220-••G	1789	95,8	95,7	94,8	0,86	481	8,3	1680	2,4	3,1	6,9	1780	74
355	M3BP 355SMC 4	3GBP352230-••G	1788	95,8	95,7	94,9	0,87	536	7,8	1894	2,5	3	7,2	1820	78
560	M3BP 400LA 4	3GBP402510-••G	1792	96,5	96,4	95,7	0,84	863	7,8	2985	2,7	3,1	15	3200	83
630	M3BP 400LB 4	3GBP402520-••G	1792	96,6	96,5	95,9	0,85	959	8,9	3358	2,2	3,3	16	3300	83
710 [1]	M3BP 400LC 4	3GBP402530-••G	1792	96,9	96,8	96,2	0,84	1091	7,9	3784	2,5	3,3	17	3400	83
800	M3BP 450LA 4	3GBP452510-••G	1792	96,7	96,6	95,9	0,85	1217	6,8	4261	1,4	3,3	23	4050	89
900	M3BP 450LB 4	3GBP452520-••G	1792	96,9	96,5	96,2	0,85	1373	7,9	4794	1,3	3,1	25	4350	89
1000 [1]	M3BP 450LC 4	3GBP452530-••G	1792	97,2	97,1	96,4	0,86	1505	7,2	5329	1,4	2,8	30	4700	89

[1] Temperature rise class F
[2] Efficiency class IE1

Technical data, 460 V 60 Hz

IE2 cast iron motors

IP 55 - IC 411 - Insulation class F, temperature rise class B
IE2 efficiency class according to IEC 60034-30-1; 2014

Output kW	Motor type	Product code	Speed r/min	Efficiency IEC 60034-30-1; 2014 Full load 100%	3/4 load 75%	1/2 load 50%	Power factor Cosφ	Current I_N A	I_s/I_N	Torque T_N Nm	T_l/T_N	T_b/T_N	Moment of inertia J = 1/4 GD²kgm²	Weight kg	Sound pressure Level L_{PA} dB
1800 r/min = 4 poles				**460 V 60 Hz**				**High-output design**							
18.5	M3BP 160MLC 4	3GBP162430-••G	1774	92,4	92,7	92,1	0,83	30,2	8,7	99,5	3,3	3,6	0,11	173	66
22	M3BP 160MLD 4	3GBP162440-••G	1770	92,5	93,2	92,6	0,84	35,4	7,8	118	2,7	3,3	0,125	187	66
30	M3BP 180MLC 4	3GBP182430-••G	1777	93,2	93,6	93	0,83	48,6	8,3	161	2,9	3,3	0,217	235	66
37	M3BP 200MLB 4	3GBP202420-••G	1783	94,2	94,5	94,1	0,84	58,6	8,5	198	2,8	3,3	0,343	307	67
45	M3BP 200MLC 4	3GBP202430-••G	1783	94,4	94,5	93,9	0,83	72	8,6	241	3,2	3,6	0,366	319	67
55	M3BP 225SMC 4	3GBP222230-••G	1782	94,4	94,5	93,8	0,85	86	8,5	294	3,1	3,4	0,474	370	70
64	M3BP 225SMD 4	3GBP222240-••G	1783	94,4	94,4	93,4	0,85	100	9,4	342	3,5	3,7	0,542	399	70
75	M3BP 250SMB 4	3GBP252220-••G	1782	94,8	95	94,4	0,85	116	8,4	401	3,1	3,5	0,866	450	71
90	M3BP 250SMC 4	3GBP252230-••G	1776	95,2	95,3	94,6	0,84	141	8,6	483	3,5	3,7	0,941	478	71

Technical data, 460 V 60 Hz

IE2 cast iron motors

IP 55 - IC 411 - Insulation class F, temperature rise class B
IE2 efficiency class according to IEC 60034-30-1; 2014

Output kW	Motor type	Product code	Speed r/min	Efficiency IEC 60034-30-1; 2014 Full load 100%	3/4 load 75%	1/2 load 50%	Power factor Cosφ	Current I_N A	I_s/I_N	Torque T_N Nm	T_l/T_N	T_b/T_N	Moment of inertia J = 1/4 GD²kgm²	Weight kg	Sound pressure Level L_{PA} dB
1200 r/min = 6 poles				**460 V 60 Hz**				**CENELEC-design**							
0.18	M3BP 71MA 6	3GBP073321-••B	1120	69	68,1	63,5	0,62	0,52	3,8	1,53	2,5	2,7	0,00089	10	45
0.25	M3BP 71MB 6	3GBP073322-••B	1125	72,6	71,3	66	0,63	0,68	4,4	2,1	3,1	3,4	0,0011	12	45
0.37	M3BP 80MA 6	3GBP083321-••B	1135	74,5	73,7	69,3	0,64	0,97	4,9	3,1	2,8	3,1	0,00187	15	49
0.55	M3BP 80MB 6	3GBP083322-••B	1135	71,2	70,8	65,5	0,66	1,34	4,5	4,6	2,1	2,8	0,00239	17	49
0.75	M3BP 90SLC 6	3GBP093323-••B	1160	80,4	78,1	73	0,54	2,1	5,1	6,1	2,7	3,7	0,00491	25	46
1.1	M3BP 90SLE 6	3GBP093324-••B	1140	81,2	81	78	0,65	2,6	4,6	9,2	2,3	2,9	0,0054	28	47
1.5	M3BP 100L 6	3GBP103322-••B	1160	82,4	82	79,4	0,68	3,31	4,9	12,4	1,6	3,2	0,00873	37	52
3	M3BP 132SMB 6	3GBP133321-••B	1180	86,3	84,8	81	0,62	7,24	6,2	24,36	1,9	3,4	0,0334	69	60
4	M3BP 132SMC 6	3GBP133322-••B	1165	86,8	86,3	84	0,7	8,58	5,2	32,81	1,6	2,6	0,0334	69	60
5.5	M3BP 132SMF 6	3GBP133324-••B	1165	87,4	86,8	84,5	0,7	11,2	5,7	44,97	2,1	2,7	0,0487	86	60
7.5	M3BP 160MLA 6	3GBP163410-••G	1179	89,6	90	88,9	0,77	13,6	7,4	60,7	1,7	3,2	0,087	134	63
11	M3BP 160MLB 6	3GBP163420-••G	1177	90,4	91	90	0,77	19,8	8,4	89,2	2	3,4	0,114	172	63
15	M3BP 180MLA 6	3GBP183410-••G	1181	91,3	91,7	90,8	0,74	27,8	6,5	121	1,9	3,1	0,168	207	63
18.5	M3BP 200MLA 6	3GBP203410-••G	1190	92,2	92,2	91,2	0,79	31,8	7,5	148	2,5	3,2	0,382	269	67
22	M3BP 200MLB 6	3GBP203420-••G	1189	92,7	93,1	92,2	0,81	36,7	7,5	176	2,5	3,2	0,448	291	67
30	M3BP 225SMA 6	3GBP223210-••G	1189	93,2	93,4	92,4	0,82	49,2	8	240	2,8	3,2	0,663	349	67
37	M3BP 250SMA 6	3GBP253210-••G	1191	93,6	93,8	93,1	0,81	61,2	7,6	296	2,6	3	1,13	395	67
45 [2]	M3BP 280SMA 6	3GBP283210-••G	1191	92,8	92,8	91,6	0,83	73	8	360	2,7	2,8	1,85	605	70
55 [2]	M3BP 280SMB 6	3GBP283220-••G	1191	93,2	93,1	92	0,84	88	8	440	3	2,9	2,2	645	70
75	M3BP 315SMA 6	3GBP313210-••G	1193	94,1	93,9	92,7	0,82	121	8,5	599	2,6	3,1	3,2	830	75
90	M3BP 315SMB 6	3GBP313220-••G	1193	94,7	94,6	93,6	0,82	146	8,6	720	2,6	3,1	4,1	930	75
110 [2]	M3BP 315SMC 6	3GBP313230-••G	1192	94,6	94,6	93,7	0,83	177	8,5	880	2,8	3,2	4,9	1000	75
132	M3BP 315MLA 6	3GBP313410-••G	1192	95,1	95,1	94,3	0,82	211	8,6	1057	3	3,3	5,8	1150	72
160	M3BP 355SMA 6	3GBP353210-••G	1194	95	94,9	93,9	0,83	255	7,9	1279	2,2	2,9	7,9	1520	80
200	M3BP 355SMB 6	3GBP353220-••G	1194	95	94,9	94	0,83	319	8,2	1599	2,4	3	9,7	1680	80
250	M3BP 355SMC 6	3GBP353230-••G	1194	95,3	95,2	94,3	0,82	403	8,5	1999	2,9	3,2	11,3	1820	80
315	M3BP 355MLB 6	3GBP353420-••G	1193	95,9	95,7	94,8	0,82	499	8	2521	2,8	3	13,5	2180	80
355	M3BP 355LKA 6	3GBP353810-••G	1193	95,8	95,5	94,6	0,8	579	8,7	2842	3	3,2	15,5	2500	80
400	M3BP 400LA 6	3GBP403510-••G	1194	96,1	96	95,2	0,82	637	8,2	3200	2,4	3	17	2900	79
450	M3BP 400LB 6	3GBP403520-••G	1194	96	95,8	95	0,82	713	7,9	3598	2,5	3,1	20,5	3150	79
500	M3BP 400LC 6	3GBP403530-••G	1194	96,2	96,1	95,4	0,84	777	8,1	4000	2,6	3	22	3300	79
560	M3BP 400LD 6	3GBP403540-••G	1194	96,4	96,3	95,7	0,85	856	7,8	4481	2,4	3,2	24	3400	79
630	M3BP 450LA 6	3GBP453510-••G	1195	96,5	96,4	95,7	0,84	978	6,8	5036	1,1	2,9	31	4150	85
710	M3BP 450LB 6	3GBP453520-••G	1196	96,9	96,8	96,2	0,85	1085	8,2	5671	1,4	2,9	37	4500	85
800 [1]	M3BP 450LC 6	3GBP453530-••G	1195	96,9	98,8	96,1	0,84	1235	8,4	6389	1,3	3,1	41	4800	85

[1] Temperature rise class F
[2] Efficiency class IE1

Technical data, 460 V 60 Hz

IE2 cast iron motors

IP 55 - IC 411 - Insulation class F, temperature rise class B
IE2 efficiency class according to IEC 60034-30-1; 2014

Output kW	Motor type	Product code	Speed r/min	Efficiency IEC 60034-30-1; 2014 Full load 100%	3/4 load 75%	1/2 load 50%	Power factor Cosφ	Current I_N A	I_s/I_N	Torque T_N Nm	T_l/T_N	T_b/T_N	Moment of inertia J = 1/4 GD²kgm²	Weight kg	Sound pressure Level L_{PA} dB
1200 r/min = 6 poles				**460 V 60 Hz**				**High-output design**							
15	M3BP 160MLC 6	3GBP163430-••G	1176	90,7	91,3	90,5	0,75	27,6	8,1	121	1,9	4,1	0,131	185	63
18.5	M3BP 180MLB 6	3GBP183420-••G	1180	92	92,5	91,8	0,78	32,3	6,6	149	1,9	3	0,198	221	63
30	M3BP 200MLC 6	3GBP203430-••G	1188	93	93,3	92,5	0,83	48,7	8	241	2,6	3,2	0,531	318	67
37	M3BP 225SMB 6	3GBP223220-••G	1188	93,8	94,1	93,5	0,83	59,6	7,5	297	2,5	3	0,821	393	67
45	M3BP 225SMC 6	3GBP223230-••G	1187	93,6	94,1	93,6	0,82	73,5	7,3	362	2,5	2,9	0,821	393	67
45	M3BP 250SMB 6	3GBP253220-••G	1191	93,9	94,2	93,5	0,82	73,3	7,9	360	2,7	3,1	1,37	441	67
55	M3BP 250SMC 6	3GBP253230-••G	1189	94	94,3	93,7	0,83	88,4	8,1	441	2,9	3,1	1,5	468	67

Technical data, 460 V 60 Hz

IE2 cast iron motors

IP 55 - IC 411 - Insulation class F, temperature rise class B
IE2 efficiency class according to IEC 60034-30-1; 2014

Output kW	Motor type	Product code	Speed r/min	Efficiency IEC 60034-30-1; 2014 Full load 100%	3/4 load 75%	1/2 load 50%	Power factor Cosφ	Current I_N A	I_s/I_N	Torque T_N Nm	T_l/T_N	T_b/T_N	Moment of inertia J = 1/4 GD²kgm²	Weight kg	Sound pressure Level L_{PA} dB
900 r/min = 8 poles				**460 V 60 Hz**				**CENELEC-design**							
0.09	M3BP 71MA 8	3GBP074101-••B	835	53	49,4	42,1	0,59	0,36	2,4	1,02	2,6	2,8	0,00089	11	43
0.12	M3BP 71MB 8	3GBP074102-••B	840	54,9	49,9	41,5	0,49	0,57	3,1	1,35	2,5	3,2	0,0011	12	46
0.18	M3BP 80MA 8	3GBP084101-••B	860	58,9	55,9	49,2	0,55	0,74	3,5	2	2,4	3,5	0,00187	15	48
0.25	M3BP 80MB 8	3GBP084102-••B	845	64,2	61,8	55,7	0,58	0,88	3,5	2,85	2,2	3,2	0,00239	17	53
0.37	M3BP 90SLB 8	3GBP094102-••B	860	69,1	66	58,1	0,51	1,38	3,3	4,1	2	2,9	0,00444	24	53
0.55	M3BP 90SLC 8	3GBP094103-••B	825	68,1	67,6	62,8	0,62	1,7	3	6,45	1,6	2,3	0,00491	25	56
0.75	M3BP 100LA 8	3GBP104101-••B	865	77,1	75,5	70,8	0,56	2,3	4,1	8,25	2	3,2	0,0072	30	49
1.1	M3BP 100LB 8	3GBP104102-••B	855	79,7	79	75,5	0,61	2,84	4	12,2	1,8	2,8	0,00871	30	56
1.5	M3BP 112M 8	3GBP114101-••B	850	79,2	79,1	76,3	0,67	3,64	4,1	16,9	2,1	2,7	0,0106	39	58
2.2	M3BP 132SMA 8	3GBP134101-••B	870	80,8	79,6	76,1	0,63	5,93	5,2	24,1	1,7	3,2	0,0334	70	59
3	M3BP 132SMB 8	3GBP134102-••B	870	83,2	82	78,4	0,63	7,7	5,2	32,75	1,8	3,3	0,04	75	61
4	M3BP 160MLA 8	3GBP164410-••G	882	85,8	85,7	83,4	0,64	9,1	5,9	43,3	1,6	3	0,068	120	63
5.5	M3BP 160MLB 8	3GBP164420-••G	881	86,4	86,6	84,6	0,65	12,2	6,2	59,6	1,5	3	0,085	134	63
7.5	M3BP 160MLC 8	3GBP164430-••G	882	87,7	87,8	86,2	0,63	17	5,1	81,2	1,5	3,2	0,132	184	63
11	M3BP 180MLA 8	3GBP184410-••G	885	88,6	89,2	87,8	0,66	23,5	5,1	118	2	2,9	0,214	233	63
15	M3BP 200MLA 8	3GBP204410-••G	890	90,1	90,5	89,4	0,71	28,5	5,9	160	2,3	2,7	0,45	290	64
18.5	M3BP 225SMA 8	3GBP224210-••G	890	90,1	90,4	89	0,72	35	5,9	198	2,2	2,5	0,669	350	67
22	M3BP 225SMB 8	3GBP224220-••G	890	91,6	91,9	90,8	0,73	40,8	6,3	236	2,2	2,6	0,722	363	67
30	M3BP 250SMA 8	3GBP254210-••G	893	91,6	91,6	90,3	0,7	57,8	6,6	320	2,8	2,7	1,4	440	67
37	M3BP 280SMA 8	3GBP284210-••G	893	92,3	92,1	90,6	0,78	64	8,1	395	1,8	3,4	1,85	605	68
45	M3BP 280SMB 8	3GBP284220-••G	892	92,3	92,1	90,6	0,77	79	8,4	481	1,9	3,5	2,2	645	69
55	M3BP 315SMA 8	3GBP314210-••G	893	93	92,8	91,6	0,79	93,9	7,8	587	1,7	3	3,2	830	62
75	M3BP 315SMB 8	3GBP314220-••G	892	93,4	93,4	92,4	0,78	128	7,9	802	1,8	3	4,1	930	62
90	M3BP 315SMC 8	3GBP314230-••G	892	93,9	93,9	93	0,8	149	8,2	962	1,9	3	4,9	1000	64
110	M3BP 315MLA 8	3GBP314410-••G	891	93,6	93,7	93	0,79	186	8,1	1178	1,9	3	5,8	1150	76
132	M3BP 355SMA 8	3GBP354210-••G	895	94,4	94,2	92,9	0,76	230	8,3	1409	1,5	2,9	7,9	1520	72
160	M3BP 355SMB 8	3GBP354220-••G	895	94,4	94,2	92,9	0,77	274	8,4	1703	1,6	2,8	9,7	1680	72
200	M3BP 355SMC 8	3GBP354230-••G	893	94,9	94,8	93,9	0,79	335	8,2	2143	1,7	2,9	11,3	1820	72
250	M3BP 355MLB 8	3GBP354420-••G	893	94,9	94,8	94	0,79	417	8,3	2672	1,6	2,9	13,5	2180	75
315	M3BP 400LA 8	3GBP404510-••G	894	95,5	95,5	94,9	0,8	520	7	3362	1,2	2,9	17	2900	73
355	M3BP 400LB 8	3GBP404520-••G	894	96,3	96,4	95,9	0,82	564	8,4	3793	1,2	2,8	21	3200	73
400	M3BP 400LC 8	3GBP404530-••G	895	95,9	96	95,3	0,81	647	6,4	4273	1,3	3	24	3400	73
450	M3BP 450LA 8	3GBP454510-••G	895	96,6	96,7	96,3	0,82	709	6,9	4803	1,1	2,7	26	3750	80
500	M3BP 450LB 8	3GBP454520-••G	895	96,7	96,7	96,3	0,82	787	7,3	5336	1,1	2,8	29	4000	80
560	M3BP 450LC 8	3GBP454530-••G	894	96,1	96,1	95,5	0,81	907	6,5	5979	1,4	3,1	35	4350	80
630 [1]	M3BP 450LD 8	3GBP454540-••G	896	96,9	96,8	96,1	0,81	1013	8,6	6717	1,5	3,4	41	4800	80

[1] Temperature rise class F

Technical data, 460 V 60 Hz

IE2 cast iron motors

IP 55 - IC 411 - Insulation class F, temperature rise class B
IE2 efficiency class according to IEC 60034-30-1; 2014

Output kW	Motor type	Product code	Speed r/min	Efficiency IEC 60034-30-1; 2014 Full load 100%	3/4 load 75%	1/2 load 50%	Power factor Cosφ	Current I_N A	I_s/I_N	Torque T_N Nm	T_l/T_N	T_b/T_N	Moment of inertia J = 1/4 GD²kgm²	Weight kg	Sound pressure Level L_{PA} dB
900 r/min = 8 poles				**460 V 60 Hz**				**High-output design**							
18.5	M3BP 200MLB 8	3GBP204420-••G	891	90,1	90,4	89	0,72	35,3	6,1	198	2,3	2,6	0,53	318	64
30	M3BP 225SMC 8	3GBP224230-••G	889	91,6	91,9	91,1	0,72	56,3	6,4	322	2,6	2,7	0,828	393	67
37	M3BP 250SMB 8	3GBP254220-••G	891	92,3	92,7	92	0,72	68,9	6,1	396	2,8	2,6	1,51	468	67
45	M3BP 250SMC 8	3GBP254230-••G	891	92,3	92,9	92,3	0,74	81,7	6,4	482	2,5	2,7	1,51	468	67

Technical data, 400 V 50 Hz

IE3 cast iron motors

IP 55 - IC 411 - Insulation class F, temperature rise class B
IE3 efficiency class according to IEC 60034-30-1; 2014

Output kW	Motor type	Product code	Speed r/min	Efficiency IEC 60034-30-1; 2014 Full load 100%	3/4 load 75%	1/2 load 50%	Power factor Cosφ	Current I_N A	I_s/I_N	Torque T_N Nm	T_l/T_N	T_b/T_N	Moment of inertia J = 1/4 GD²kgm²	Weight kg	Sound pressure Level L_{PA} dB
3000 r/min = 2 poles				**400 V 50 Hz**				**CENELEC-design**							
0.55	M3BP 71ME 2	3GBP071350-••L	2755	77,8	79,3	78,4	0,83	1,25	6,8	1,9	2,8	3,1	0,00045	11	56
0.75	M3BP 80MC 2	3GBP081330-••L	2879	80,7	81,0	78,8	0,82	1,6	7,2	2,5	3,4	4,2	0,001	17	57
1.1	M3BP 80ME 2	3GBP081350-••L	2865	82,7	83,7	83,0	0,84	2,3	7,2	3,7	3,5	4,1	0,0012	18	60
1.5	M3BP 90SLA 2	3GBP091010-••L	2901	84,2	84,8	83,8	0,89	2,9	7,7	4,93	2,1	3,5	0,0028	27	69
2.2	M3BP 90LA 2	3GBP091510-••L	2904	85,9	86,3	84,8	0,89	4,2	8,8	7,2	3,1	3,8	0,0036	30	64
3	M3BP 100MLA 2	3GBP101410-••L	2895	87,1	87,9	87,3	0,92	5,4	8,2	9,9	3,3	3,9	0,0013	42	68
4	M3BP 112ME 2	3GBP111350-••L	2882	88,1	89,9	90,9	0,93	6,9	8,3	13	2,9	3,7	0,0139	56	70
5.5	M3BP 132SMC 2	3GBP131230-••L	2908	89,2	89,5	88,5	0,90	9,8	7,6	18	2,3	3,8	0,0182	69	70
7.5	M3BP 132SME 2	3GBP131250-••L	2916	90,1	90,5	90,1	0,90	13,3	8,4	24,6	2,5	4,3	0,0203	75	70
11	M3BP 160MLA 2	3GBP161410-••L	2943	91,2	92,0	91,6	0,91	19,1	7,2	35,57	2,6	3,6	0,057	144	69
15	M3BP 160MLB 2	3GBP161420-••L	2947	91,9	92,2	91,8	0,88	26,5	8,2	48,49	3,2	4,2	0,063	152	69
18.5	M3BP 160MLC 2	3GBP161430-••L	2949	92,4	93,0	92,6	0,90	32	9,0	59,81	3,3	3,9	0,076	164	73
22	M3BP 180MLA 2	3GBP181410-••L	2956	92,7	93,1	92,7	0,90	37,7	7,8	70,98	3,4	3,8	0,11	205	73
30	M3BP 200MLA 2	3GBP201410-••L	2957	93,3	93,8	93,6	0,88	52,4	7,5	96,92	2,5	3,1	0,182	263	73
37	M3BP 200MLB 2	3GBP201420-••L	2960	93,7	94,2	94,1	0,89	64,2	8,2	119,5	3,1	3,4	0,222	289	73
45	M3BP 225SMA 2	3GBP221210-••L	2968	94,0	94,0	93,0	0,87	79,6	7,3	144,8	3,2	3,1	0,296	335	76
55	M3BP 250SMA 2	3GBP251210-••L	2968	94,3	93,7	93,6	0,89	94,8	6,8	177	2,4	3,0	0,426	400	76
75	M3BP 280SMB 2	3GBP281220-••L	2978	94,7	94,4	93,5	0,88	130	7,0	240	2,3	3,0	0,9	665	74
90	M3BP 280SMC 2	3GBP281230-••L	2975	95,0	95,0	94,2	0,88	158	6,4	289	2,1	2,8	0,99	690	74
110	M3BP 315SMB 2	3GBP311220-••L	2982	95,2	94,9	93,9	0,87	192	7,0	352	1,8	2,7	1,3	910	78
132	M3BP 315SMC 2	3GBP311230-••L	2982	95,4	95,4	94,6	0,87	229	6,8	422	2,0	2,8	1,5	965	78
160	M3BP 315SMD 2	3GBP311240-••L	2983	95,6	95,6	94,9	0,87	275	7,4	512	2,2	2,8	1,7	1025	78
200	M3BP 315MLA 2	3GBP311410-••L	2983	95,8	95,8	95,3	0,88	342	7,7	640	2,5	3,1	2,1	1190	81
250	M3BP 355SMA 2	3GBP351210-••L	2985	95,8	95,6	94,6	0,89	423	7,7	800	2,1	3,3	3	1600	83
315	M3BP 355SMB 2	3GBP351220-••L	2980	95,8	95,7	95,0	0,89	529	7,0	1009	2,1	3,0	3,4	1680	83
355	M3BP 355SMC 2	3GBP351230-••L	2984	95,8	95,8	95,0	0,88	605	7,2	1136	2,2	3,0	3,6	1750	83

Output kW	Motor type	Product code	Speed r/min	Efficiency IEC 60034-30-1; 2014 Full load 100%	3/4 load 75%	1/2 load 50%	Power factor Cosφ	Current I_N A	I_s/I_N	Torque T_N Nm	T_l/T_N	T_b/T_N	Moment of inertia J = 1/4 GD²kgm²	Weight kg	Sound pressure Level L_{PA} dB
3000 r/min = 2 poles				**400 V 50 Hz**				**High-output design**							
22	M3BP 160MLD 2	3GBP161440-••L	2944	92,7	93,5	93,5	0,90	38	8,4	71,36	3,2	3,7	0,071	174	74
30	M3BP 180MLB 2	3GBP181420-••L	2957	93,3	94,0	93,9	0,88	52,7	8,7	96,88	3,0	3,8	0,104	215	74
37	M3BP 180MLC 2	3GBP181430-••L	2952	93,7	94,5	94,5	0,88	64,7	8,7	119,69	3,1	3,7	0,115	229	74
45	M3BP 200MLC 2	3GBP201430-••L	2955	94,0	94,5	94,4	0,89	77,6	8,0	145,42	2,9	3,3	0,214	305	77
55	M3BP 225SMB 2	3GBP221220-••L	2966	94,3	94,6	94,1	0,88	95,6	7,4	177,08	2,9	2,9	0,274	355	79
75	M3BP 225SMC 2	3GBP221230-••L	2966	94,7	94,8	94,1	0,88	129	8,1	241,47	3,3	3,0	0,329	408	79
75	M3BP 250SMB 2	3GBP251220-••L	2971	94,7	95,1	94,8	0,90	127	7,9	241,06	2,8	3,3	0,644	479	81
90 [1]	M3BP 250SMC 2	3GBP251230-••L	2968	95,0	95,4	95,0	0,90	151	8,4	289,57	2,7	3,4	0,644	495	81
110	M3BP 280SMD 2	3GBP281240-••L	2977	95,2	95,2	94,4	0,88	190	7,5	353	2,4	3,1	1,15	725	75
250	M3BP 315LKB 2	3GBP311820-••L	2983	95,8	96,0	95,5	0,90	419	7,7	800	2,5	3,3	2,9	1540	81

[1] Temperature rise class F

Technical data, 400 V 50 Hz

IE3 cast iron motors

IP 55 - IC 411 - Insulation class F, temperature rise class B
IE3 efficiency class according to IEC 60034-30-1; 2014

Output kW	Motor type	Product code	Speed r/min	Efficiency IEC 60034-30-1; 2014 Full load 100%	3/4 load 75%	1/2 load 50%	Power factor Cosφ	Current I_N A	I_s/I_N	Torque T_N Nm	T_i/T_N	T_b/T_N	Moment of inertia J = 1/4 GD²kgm²	Weight kg	Sound pressure Level L_{PA} dB
1500 r/min = 4 poles				**400 V 50 Hz**				**CENELEC-design**							
0.25	M3BP 71MD 4	3GBP072340-••L	1416	73,5	75,1	73,8	0,80	0,6	4,8	1,68	2,0	2,6	0,0009	11	45
0.37	M3BP 71MLE 4	3GBP072450-••L	1432	77,3	77,4	74,5	0,76	0,9	5,8	2,46	2,7	3,3	0,00122	15	45
0.55	M3BP 80MLC 4	3GBP082430-••L	1444	80,8	81,6	80,1	0,80	1,2	6,7	4	3,0	3,5	0,0028	20	45
0.75	M3BP 80MLE 4	3GBP082450-••L	1448	82,5	82,5	80,1	0,78	1,7	7,4	4,9	3,5	4,0	0,0033	22	50
1.1	M3BP 90LA 4	3GBP092510-••L	1443	84,1	84,6	83,5	0,76	2,4	7,9	7,26	3,4	4,2	0,0049	28	56
1.5	M3BP 90LB 4	3GBP092520-••L	1445	85,3	85,0	82,5	0,77	3,3	8,3	9,9	3,8	4,6	0,0067	32	56
2.2	M3BP 100LA 4	3GBP102510-••L	1448	86,7	89,0	86,1	0,81	4,5	7,5	14	2,3	3,6	0,0109	38	56
3	M3BP 100MLB 4	3GBP102420-••L	1444	87,7	88,4	87,6	0,81	6,1	7,0	19,8	3,3	4,1	0,0121	42	58
4	M3BP 112ME 4	3GBP112350-••L	1453	88,6	88,9	88,0	0,74	8,9	7,8	26	3,5	4,3	0,0188	52	59
5.5	M3BP 132SMB 4	3GBP132220-••L	1463	89,6	89,8	88,7	0,74	11,9	7,6	36	2,8	3,9	0,0295	68	70
7.5	M3BP 132SME 4	3GBP132250-••L	1462	90,4	90,8	90,2	0,76	15,7	7,9	49	3,0	4,0	0,0376	78	64
11	M3BP 160MLA 4	3GBP162410-••L	1477	91,4	91,8	91,1	0,82	21,1	7,6	71,27	2,6	3,3	0,11	160	61
15	M3BP 160MLB 4	3GBP162420-••L	1477	92,1	92,4	91,6	0,82	28,5	8,2	96,99	3,0	3,7	0,135	179	61
18.5	M3BP 180MLA 4	3GBP182410-••L	1481	92,6	93,2	92,9	0,83	34,9	7,2	119,3	2,8	3,0	0,219	215	60
22	M3BP 180MLB 4	3GBP182420-••L	1481	93,0	93,5	93,3	0,82	41,4	8,3	142	3,0	3,2	0,243	229	60
30	M3BP 200MLA 4	3GBP202410-••L	1483	93,6	93,9	93,4	0,84	54,8	7,5	193,2	2,7	3,2	0,385	292	63
37	M3BP 225SMA 4	3GBP222210-••L	1482	93,9	94,1	93,8	0,83	68,9	7,2	238,6	3,1	3,1	0,427	322	67
45	M3BP 225SMB 4	3GBP222220-••L	1482	94,2	94,4	94,0	0,84	82,3	8,0	290	3,2	3,5	0,525	357	66
55	M3BP 250SMA 4	3GBP252210-••L	1482	94,6	94,7	94,0	0,84	100	7,1	354,2	2,9	3,4	0,694	406	68
75	M3BP 280SMB 4	3GBP282220-••L	1485	95,0	95,2	94,8	0,86	133	6,4	483	2,3	2,8	1,38	645	75
90	M3BP 280SMC 4	3GBP282230-••L	1485	95,2	95,5	95,2	0,86	158	7,1	578	2,5	2,9	1,73	700	75
110	M3BP 315SMB 4	3GBP312220-••L	1489	95,4	95,5	95,0	0,84	198	7,0	705	2,1	3,0	2,43	930	71
132	M3BP 315SMC 4	3GBP312230-••L	1488	95,6	95,9	95,5	0,86	231	6,7	847	2,2	2,9	2,9	1000	71
160	M3BP 315SMD 4	3GBP312240-••L	1488	95,8	96,0	95,8	0,85	282	6,9	1026	2,2	3,0	3,2	1065	71
200	M3BP 315MLB 4	3GBP312420-••L	1487	96,0	96,4	96,4	0,86	351	6,8	1284	2,4	3,0	3,9	1220	74
250	M3BP 355SMA 4	3GBP352210-••L	1491	96,0	96,0	95,6	0,86	435	6,4	1601	2,1	2,9	5,9	1610	78
315	M3BP 355SMB 4	3GBP352220-••L	1491	96,0	96,1	95,7	0,85	550	7,3	2018	2,4	3,3	6,9	1780	78
355	M3BP 355SMC 4	3GBP352230-••L	1490	96,0	96,2	95,8	0,86	616	6,3	2273	2,3	2,8	7,2	1820	78

Output kW	Motor type	Product code	Speed r/min	Efficiency IEC 60034-30-1; 2014 Full load 100%	3/4 load 75%	1/2 load 50%	Power factor Cosφ	Current I_N A	I_s/I_N	Torque T_N Nm	T_i/T_N	T_b/T_N	Moment of inertia J = 1/4 GD²kgm²	Weight kg	Sound pressure Level L_{PA} dB
1500 r/min = 4 poles				**400 V 50 Hz**				**High-output design**							
18.5	M3BP 160MLC 4	3GBP162430-••L	1473	92,6	93,3	93,1	0,82	35,1	8,3	119,93	3,1	3,5	0,124	180	67
30	M3BP 180MLC 4	3GBP182430-••L	1476	93,6	94,1	94,1	0,82	56,5	7,4	194,5	2,5	3,2	0,191	235	62
37	M3BP 200MLB 4	3GBP202420-••L	1480	93,9	94,8	94,8	0,82	69,3	7,5	238,73	2,8	2,9	0,362	305	68
55	M3BP 225SMC 4	3GBP222230-••L	1478	94,6	94,9	94,8	0,84	99,9	7,7	355,35	3,3	3,3	0,536	391	71
75	M3BP 250SMB 4	3GBP252220-••L	1482	95,0	95,4	95,0	0,84	135	7,9	483,26	3,3	3,5	0,941	464	73
110	M3BP 280SMD 4	3GBP282240-••L	1486	95,4	95,7	95,3	0,85	196	7,3	707	2,7	3,0	1,95	750	76
132	M3BP 280MLA 4	3GBP282410-••L	1483	95,6	95,9	95,7	0,86	232	7,0	849	2,7	2,8	2,3	840	75
160	M3BP 280MLB 4	3GBP282420-••L	1484	95,8	96,0	95,8	0,86	280	7,4	1029	2,9	2,9	2,5	890	75
250	M3BP 315LKA 4	3GBP312810-••L	1488	96,0	96,3	96,1	0,85	442	6,9	1604	2,5	3,2	4,4	1410	78
315	M3BP 315LKC 4	3GBP312830-••L	1489	96,0	96,1	95,8	0,85	557	8,3	2020	3,0	3,3	5,5	1600	78

Technical data, 400 V 50 Hz

IE3 cast iron motors

IP 55 - IC 411 - Insulation class F, temperature rise class B
IE3 efficiency class according to IEC 60034-30-1; 2014

Output kW	Motor type	Product code	Speed r/min	Efficiency IEC 60034-30-1; 2014 Full load 100%	3/4 load 75%	1/2 load 50%	Power factor Cosφ	Current I_N A	I_s/I_N	Torque T_N Nm	T_l/T_N	T_b/T_N	Moment of inertia J = 1/4 GD²kgm²	Weight kg	Sound pressure Level L_{PA} dB
1000 r/min = 6 poles				**400 V 50 Hz**				**CENELEC-design**							
0.25	M3BP 80MB 6	3GBP083320-••L	942	68,6	67,0	61,7	0,61	0,82	4,8	2,5	2,7	2,9	0,0019	14	47
0.75	M3BP 90SLD 6	3GBP093040-••L	940	78,9	80,3	79,2	0,75	1,8	4,4	7,57	2,1	2,8	0,0056	29	44
1.1	M3BP 90LF 6	3GBP093560-••L	944	81,0	81,7	80,1	0,75	2,62	4,7	11,1	2,1	2,8	0,0068	33	44
1.5	M3BP 100MLB 6	3GBP103420-••L	960	82,5	82,5	80,1	0,68	3,8	5,4	14,9	2,7	3,4	0,012	41	49
2.2	M3BP 112MJ 6	3GBP113390-••L	962	84,3	85,5	84,7	0,68	5,3	4,2	21,8	1,4	2,3	0,0196	53	66
3	M3BP 132SMB 6	3GBP133220-••L	973	85,6	85,1	82,9	0,62	8	6,6	29,2	2,7	3,8	0,0355	75	57
4	M3BP 132SMF 6	3GBP133260-••L	971	86,8	86,5	84,7	0,62	10,7	6,6	39	2,7	3,8	0,0416	82	57
5.5	M3BP 132SMJ 6	3GBP133290-••L	966	88,0	89,1	88,9	0,73	12,3	4,2	54	1,7	2,7	0,0408	81	57
7.5	M3BP 160MLA 6	3GBP163410-••L	975	89,1	90,0	90,0	0,77	15,7	5,7	73,24	1,4	3,0	0,089	146	59
11	M3BP 160MLB 6	3GBP163420-••L	975	90,3	91,1	91,1	0,78	22,5	6,4	107,5	1,6	3,1	0,138	180	64
15	M3BP 180MLA 6	3GBP183410-••L	979	91,2	91,9	91,6	0,79	30,1	5,2	146,9	1,5	2,7	0,212	212	63
18.5	M3BP 200MLA 6	3GBP203410-••L	989	91,7	91,9	91,2	0,82	35,2	6,5	178,8	2,2	3,2	0,496	272	59
22	M3BP 200MLB 6	3GBP203420-••L	989	92,2	92,4	91,4	0,81	42,4	7,3	212,4	2,6	3,5	0,585	297	59
30	M3BP 225SMA 6	3GBP223210-••L	988	92,9	93,0	92,2	0,77	60,4	7,7	290,6	2,9	3,6	0,724	349	63
37	M3BP 250SMA 6	3GBP253210-••L	990	93,3	93,7	93,5	0,80	71,1	6,5	357	2,4	3,1	1,3	431	58
45	M3BP 280SMB 6	3GBP283220-••L	991	93,7	94,0	93,5	0,84	82	7,4	433	2,7	3,0	1,87	645	72
55	M3BP 280SMC 6	3GBP283230-••L	992	94,1	94,3	93,8	0,86	99	7,5	528	2,8	3,0	2,57	725	71
75	M3BP 315SMB 6	3GBP313220-••L	994	94,6	94,9	94,6	0,84	136	6,8	720	1,8	2,6	4,1	930	75
90	M3BP 315SMC 6	3GBP313230-••L	994	94,9	95,1	94,7	0,84	164	7,2	864	2,0	3,0	4,6	1000	76
110	M3BP 315SMD 6	3GBP313240-••L	994	95,1	95,3	95,0	0,83	200	7,3	1056	2,2	3,1	4,9	1040	75
132	M3BP 315MLB 6	3GBP313420-••L	995	95,4	95,5	95,1	0,82	242	7,3	1266	2,3	3,2	6,3	1200	72
160	M3BP 355SMA 6	3GBP353210-••L	993	95,6	95,8	95,6	0,82	292	6,7	1538	2,5	2,6	7,9	1520	75
200	M3BP 355SMB 6	3GBP353220-••L	993	95,8	96,2	96,1	0,82	365	6,7	1923	2,6	2,5	9,7	1680	75
250	M3BP 355SMC 6	3GBP353230-••L	993	95,8	96,1	95,8	0,81	465	7,7	2404	3,0	3,1	11,3	1820	75
315	M3BP 355MLB 6	3GBP353420-••L	993	95,8	96,1	96,0	0,83	571	6,8	3029	2,6	3,2	13,5	2180	76
355	M3BP 355LKA 6	3GBP353810-••L	993	95,8	96,0	95,9	0,81	653	7,5	3413	2,9	3,2	15,5	2500	76

Output kW	Motor type	Product code	Speed r/min	Efficiency IEC 60034-30-1; 2014 Full load 100%	3/4 load 75%	1/2 load 50%	Power factor Cosφ	Current I_N A	I_s/I_N	Torque T_N Nm	T_l/T_N	T_b/T_N	Moment of inertia J = 1/4 GD²kgm²	Weight kg	Sound pressure Level L_{PA} dB
1000 r/min = 6 poles				**400 V 50 Hz**				**High-output design**							
37	M3BP 225SMB 6	3GBP223220-••L	985	93,3	93,7	93,4	0,80	71,5	7,0	358,7	2,7	3,0	0,813	382	68
45	M3BP 250SMB 6	3GBP253220-••L	991	93,7	94,1	93,6	0,81	85,5	7,6	433,62	2,9	3,3	1,5	465	68
55	M3BP 250SMC 6	3GBP253230-••L	989	94,1	94,7	94,5	0,80	105	7,1	531,05	3,0	3,1	1,49	466	68
75	M3BP 280SMD 6	3GBP283240-••L	991	94,6	94,9	94,5	0,85	135	7,6	723	2,8	3,0	3	740	73
160	M3BP 315LKA 6	3GBP313810-••L	994	95,6	95,8	95,4	0,81	298	7,5	1535	2,2	3,1	7,3	1410	76
180	M3BP 315LKB 6	3GBP313820-••L	994	95,8	95,9	95,4	0,82	331	7,6	1729	2,3	3,1	8,3	1520	76
200	M3BP 315LKC 6	3GBP313830-••L	993	95,8	96,1	95,8	0,82	367	7,0	1923	2,2	2,8	9,2	1600	76

Technical data, 400 V 50 Hz

IE3 cast iron motors

IP 55 - IC 411 - Insulation class F, temperature rise class B
IE3 efficiency class according to IEC 60034-30-1; 2014

Output kW	Motor type	Product code	Speed r/min	Efficiency IEC 60034-30-1; 2014 Full load 100%	3/4 load 75%	1/2 load 50%	Power factor Cosφ	Current I_N A	I_s/I_N	Torque T_N Nm	T_l/T_N	T_b/T_N	Moment of inertia J = 1/4 GD²kgm²	Weight kg	Sound pressure Level L_{PA} dB
3000 r/min = 2 poles				**400 V 50 Hz**				**CENELEC-design**							
0.75	M3BP 80MD 2	3GBP081340-••K	2872	82,1	82,5	80,9	0,87	1,51	6,2	2,43	2,9	3,4	0,0012	18	57
1.1	M3BP 80MG 2	3GBP081370-••K	2862	84,2	85,1	84,3	0,87	2,1	6,3	3,65	3,0	3,5	0,0014	19	60
1.5	M3BP 90LB 2	3GBP091520-••K	2892	86,4	87,4	86,7	0,89	2,7	7,3	4,8	2,0	3,2	0,0031	31	69
2.2	M3BP 90LC 2	3GBP091530-••K	2900	87,6	88,3	87,4	0,89	4	9,1	7,27	3,4	4,1	0,0044	35	64
3	M3BP 100LKA 2	3GBP101810-••K	2907	89,00	89,40	88,50	0,89	5,4	8,8	9,9	3,3	4,3	0,0086	50	68
4	M3BP 112MG 2	3GBP111370-••K	2882	88,40	89,90	90,50	0,93	7	8,1	13,3	2,8	4,1	0,0132	56	70
5.5	M3BP 132SMF 2	3GBP131260-••K	2902	89,20	89,80	89,50	0,90	9,7	7,3	18,2	2,7	4,2	0,0218	77	67
7.5	M3BP 132SMG 2	3GBP131270-••K	2907	91,30	92,10	92,10	0,90	13,2	8,1	24,7	3,2	4,7	0,0218	77	70
11	M3BP 160MLA 2	3GBP161410-••K	2943	92,10	92,70	92,40	0,92	18,7	8,1	35,6	2,7	3,4	0,052	141	69
15	M3BP 160MLB 2	3GBP161420-••K	2943	92,50	93,40	93,20	0,92	25,4	8,4	48,6	3,1	3,4	0,062	170	69
18.5	M3BP 160MLC 2	3GBP161430-••K	2942	93,10	93,90	93,90	0,93	30,8	8,3	60	3,1	3,6	0,072	183	69
22	M3BP 180MLA 2	3GBP181410-••K	2957	93,20	93,90	93,80	0,91	37,4	8,1	71	2,6	3,2	0,116	234	69
30	M3BP 200MLA 2	3GBP201410-••K	2958	94,20	94,90	94,70	0,90	51	7,8	96,8	2,8	3,1	0,196	289	72
37	M3BP 200MLB 2	3GBP201420-••K	2960	94,70	95,20	95,00	0,91	61,9	8,8	119	3,1	3,4	0,217	314	72
45	M3BP 225SMA 2	3GBP221210-••K	2972	94,90	95,10	94,70	0,89	76,8	7,8	144	3,1	3,0	0,323	409	74
55	M3BP 250SMA 2	3GBP251210-••K	2975	95,20	95,40	95,00	0,89	93,6	8,0	176	2,8	3,3	0,579	452	75
75	M3BP 280SMB 2	3GBP281220-••K	2980	95,50	95,50	94,90	0,87	129	7,3	240	2,1	2,9	0,9	665	77
90	M3BP 280SMC 2	3GBP281230-••K	2981	95,70	95,60	95,00	0,88	153	8,0	288	2,5	3,1	1,15	725	77
110	M3BP 315SMB 2	3GBP311220-••K	2982	95,90	95,90	95,20	0,88	189	6,7	352	1,9	2,6	1,4	940	77
132	M3BP 315SMC 2	3GBP311230-••K	2986	96,10	96,20	95,90	0,88	226	7,9	422	2,4	3,0	1,7	1025	77
160	M3BP 315MLA 2	3GBP311410-••K	2983	96,20	96,50	96,20	0,90	268	7,3	512	2,2	2,7	2,1	1190	77
200	M3BP 355SMA 2	3GBP351210-••K	2985	96,40	96,10	95,30	0,89	336	7,6	640	2,0	3,1	3	1600	83
250	M3BP 355SMB 2	3GBP351220-••K	2983	96,40	96,50	96,10	0,90	415	7,6	800	2,2	3,0	3,4	1680	83
315	M3BP 355SMC 2	3GBP351230-••K	2984	96,40	96,40	95,90	0,89	533	7,8	1008	2,3	2,8	3,6	1750	83
355	M3BP 355MLA 2	3GBP351410-••K	2981	96,40	96,70	96,30	0,90	595	7,5	1137	2,3	2,6	4,1	2000	83

Output kW	Motor type	Product code	Speed r/min	Efficiency IEC 60034-30-1; 2014 Full load 100%	3/4 load 75%	1/2 load 50%	Power factor Cosφ	Current I_N A	I_s/I_N	Torque T_N Nm	T_l/T_N	T_b/T_N	Moment of inertia J = 1/4 GD²kgm²	Weight kg	Sound pressure Level L_{PA} dB
3000 r/min = 2 poles				**400 V 50 Hz**				**High-output design**							
200	M3BP 315MLB 2	3GBP311420-••K	2983	96,40	96,70	96,60	0,90	333	6,8	640	1,9	2,6	2,2	1220	77

Technical data, 400 V 50 Hz

IE3 cast iron motors

IP 55 - IC 411 - Insulation class F, temperature rise class B
IE3 efficiency class according to IEC 60034-30-1; 2014

Output kW	Motor type	Product code	Speed r/min	Efficiency IEC 60034-30-1; 2014 Full load 100%	3/4 load 75%	1/2 load 50%	Power factor Cosφ	Current I_N A	I_s/I_N	Torque T_N Nm	T_l/T_N	T_b/T_N	Moment of inertia J = 1/4 GD²kgm²	Weight kg	Sound pressure Level L_{PA} dB
1500 r/min = 4 poles				**400 V 50 Hz**				**CENELEC-design**							
0.55	M3BP 80MLD 4	3GBP082440-••K	1439	82,90	84,20	83,50	0,81	1,18	6,3	3,6	2,7	3,3	0,0028	20	45
0.75	M3BP 90L 4	3GBP092500-••K	1448	85,30	85,70	84,40	0,78	1,62	8,0	4,97	3,9	4,4	0,0056	30	53
1.1	M3BP 90LC 4	3GBP092530-••K	1444	87,10	87,50	86,40	0,79	2,3	7,2	7,28	2,7	3,7	0,0067	33	56
1.5	M3BP 90LD 4	3GBP092540-••K	1442	87,10	88,10	87,60	0,78	3,1	7,8	9,95	3,4	4,5	0,0072	34	56
2.2	M3BP 100LKA 4	3GBP102810-••K	1452	89,40	90,30	90,20	0,83	4,2	7,4	14,46	2,2	3,9	0,0146	49	56
3	M3BP 100LKB 4	3GBP102820-••K	1452	89,40	90,50	90,50	0,83	5,8	7,5	19,7	2,3	4,0	0,0146	49	58
4	M3BP 112MG 4	3GBP112370-••K	1454	88,60	89,10	88,60	0,75	8,7	7,5	26,3	3,5	3,7	0,0176	52	59
5.5	M3BP 132SMF 4	3GBP132260-••K	1462	90,70	91,60	91,60	0,81	10,8	7,3	35,87	2,4	3,4	0,0401	81	67
7.5	M3BP 132SMG 4	3GBP132270-••K	1457	90,40	91,50	91,70	0,81	14,8	7,3	49,1	2,4	3,4	0,0401	81	64
11	M3BP 160MLA 4	3GBP162410-••K	1473	92,20	93,00	92,70	0,84	20,4	7,7	71,3	2,6	2,9	0,108	173	62
15	M3BP 160MLB 4	3GBP162420-••K	1474	92,60	93,40	93,20	0,84	27,8	7,9	97,1	2,8	3,3	0,125	187	62
18.5	M3BP 180MLA 4	3GBP182410-••K	1481	93,30	94,00	93,80	0,82	34,9	7,6	119	3,0	3,1	0,217	235	62
22	M3BP 180MLB 4	3GBP182420-••K	1480	93,30	94,10	94,10	0,82	41,5	8,2	141	2,8	3,1	0,217	235	62
30	M3BP 200MLA 4	3GBP202410-••K	1484	94,40	94,80	94,60	0,84	54,6	8,3	193	3,0	3,3	0,366	319	63
37	M3BP 225SMA 4	3GBP222210-••K	1482	94,90	95,50	95,40	0,86	65,4	7,7	238	2,8	3,1	0,536	398	66
45	M3BP 225SMB 4	3GBP222220-••K	1482	95,20	95,60	95,50	0,85	80,2	7,9	289	2,8	3,2	0,536	398	66
55	M3BP 250SMA 4	3GBP252210-••K	1485	95,40	95,90	95,70	0,85	97,8	7,9	353	3,0	3,3	0,933	476	67
75	M3BP 280SMB 4	3GBP282220-••K	1486	95,90	96,20	96,10	0,85	134	7,4	482	2,5	2,8	1,5	665	72
90	M3BP 280SMC 4	3GBP282230-••K	1487	96,00	96,20	95,90	0,85	161	7,9	578	2,9	3,0	1,85	725	72
110	M3BP 315SMC 4	3GBP312230-••K	1491	96,20	96,50	96,10	0,85	194	7,8	704	2,4	3,1	2,9	1000	68
132	M3BP 315SMD 4	3GBP312240-••K	1490	96,30	96,60	96,20	0,85	234	7,9	846	2,6	3,2	3,2	1065	68
160	M3BP 315MLB 4	3GBP312420-••K	1490	96,50	96,70	96,40	0,87	278	7,9	1026	2,7	3,0	3,9	1220	68
200	M3BP 355SMA 4	3GBP352210-••K	1491	96,60	96,70	96,40	0,87	345	7,3	1282	2,1	2,7	5,9	1610	74
250	M3BP 355SMB 4	3GBP352220-••K	1491	96,60	96,80	96,50	0,87	433	7,8	1601	2,5	2,9	6,9	1780	74
315	M3BP 355SMC 4	3GBP352230-••K	1490	96,60	96,80	96,50	0,85	554	7,4	2017	2,8	2,9	7,2	1820	74
355	M3BP 355MLA 4	3GBP352410-••K	1491	96,60	96,90	96,50	0,87	616	7,9	2274	2,7	2,9	8,4	2140	78

Output kW	Motor type	Product code	Speed r/min	Efficiency IEC 60034-30-1; 2014 Full load 100%	3/4 load 75%	1/2 load 50%	Power factor Cosφ	Current I_N A	I_s/I_N	Torque T_N Nm	T_l/T_N	T_b/T_N	Moment of inertia J = 1/4 GD²kgm²	Weight kg	Sound pressure Level L_{PA} dB
1500 r/min = 4 poles				**400 V 50 Hz**				**High-output design**							
200	M3BP 315LKB 4	3GBP312820-••K	1490	96,60	96,80	96,70	0,87	346	7,6	1282	2,5	2,9	5	1520	74
250	M3BP 315LKC 4	3GBP312830-••K	1490	96,60	96,90	96,80	0,87	432	7,8	1601	2,3	3,0	5,5	1600	74

Technical data, 400 V 50 Hz

IE3 cast iron motors

IP 55 - IC 411 - Insulation class F, temperature rise class B
IE3 efficiency class according to IEC 60034-30-1; 2014

Output kW	Motor type	Product code	Speed r/min	Efficiency IEC 60034-30-1; 2014 Full load 100%	3/4 load 75%	1/2 load 50%	Power factor Cosφ	Current I_N A	I_s/I_N	Torque T_N Nm	T_i/T_N	T_b/T_N	Moment of inertia J = 1/4 GD²kgm²	Weight kg	Sound pressure Level L_{PA} dB
1000 r/min = 6 poles				**400 V 50 Hz**				**CENELEC-design**							
0.25	M3BP 80MA 6	3GBP083310-••K	937	73,30	72,20	67,60	0,64	0,76	2,6	2,52	1,4	2,0	0,0019	14	47
0.37	M3BP 80MD 6	3GBP083340-••K	930	77,90	78,60	76,70	0,72	0,95	3,3	3,75	1,5	2,0	0,0028	16	47
0.55	M3BP 80MLG 6	3GBP083470-••K	937	80,40	81,00	79,50	0,63	1,56	4,4	5,6	1,9	2,2	0,0044	21	47
0.75	M3BP 90LG 6	3GBP093570-••K	938	81,50	82,80	82,20	0,74	1,8	4,8	7,7	2,4	2,7	0,0072	34	44
1.1	M3BP 100LKG 6	3GBP103870-••K	969	84,40	84,50	82,80	0,68	2,6	4,1	10,9	1,6	2,2	0,0025	47	49
1.5	M3BP 112MH 6	3GBP113380-••K	972	85,80	85,60	83,60	0,64	3,8	4,5	14,7	1,3	2,5	0,0196	53	66
2.2	M3BP 132SMC 6	3GBP133230-••K	978	87,30	87,50	86,10	0,69	5,1	5,4	21,5	2,0	2,6	0,0416	81	57
3	M3BP 132SMD 6	3GBP133240-••K	977	88,50	88,80	87,50	0,69	6,9	5,9	29	1,4	2,8	0,0416	82	57
4	M3BP 132SMG 6	3GBP133270-••K	974	89,40	89,90	89,30	0,69	9,3	5,6	38,7	2,2	2,8	0,0416	82	57
5.5	M3BP 132SMH 6	3GBP133280-••K	966	89,60	90,40	90,20	0,73	12,1	5,0	54,1	1,8	2,7	0,0654	79	57
7.5	M3BP 160MLA 6	3GBP163410-••K	980	90,80	91,50	91,00	0,78	15,2	7,9	73	1,7	3,3	0,114	172	59
11	M3BP 160MLB 6	3GBP163420-••K	979	91,20	91,80	91,10	0,74	23,5	8,5	107	2,2	3,9	0,131	185	59
15	M3BP 180MLA 6	3GBP183410-••K	981	92,20	92,40	91,50	0,77	30,4	5,5	146	1,7	2,7	0,225	234	59
18.5	M3BP 200MLA 6	3GBP203410-••K	990	92,80	93,20	92,60	0,77	37,3	7,5	178	2,6	3,2	0,448	291	63
22	M3BP 200MLB 6	3GBP203420-••K	990	93,30	93,70	93,10	0,79	43	7,8	212	2,6	3,2	0,531	318	63
30	M3BP 225SMA 6	3GBP223210-••K	989	94,10	94,60	94,40	0,81	56,8	7,9	289	2,8	3,1	0,813	392	63
37	M3BP 250SMA 6	3GBP253210-••K	991	94,40	94,90	94,70	0,83	68	7,7	356	2,7	2,9	1,49	467	63
45	M3BP 280SMB 6	3GBP283220-••K	992	94,70	95,10	94,60	0,85	80,9	6,9	434	2,4	2,6	2,2	680	65
55	M3BP 280SMC 6	3GBP283230-••K	990	95,00	95,40	95,00	0,85	99,4	6,8	506	2,4	2,6	2,85	725	65
75	M3BP 315SMC 6	3GBP313230-••K	994	95,30	95,60	95,20	0,83	138	7,0	721	2,2	2,8	4,9	1000	67
90	M3BP 315SMD 6	3GBP313240-••K	994	95,50	95,80	95,40	0,81	170	7,2	864	2,4	2,9	4,9	1040	67
110	M3BP 315MLB 6	3GBP313420-••K	994	95,70	95,90	95,70	0,83	202	6,9	1058	2,3	2,7	6,3	1200	68
132	M3BP 315LKA 6	3GBP313810-••K	993	95,90	96,10	95,90	0,82	243	6,9	1269	2,4	2,7	7,3	1410	68
160	M3BP 355SMB 6	3GBP353220-••K	995	96,10	96,10	95,60	0,82	294	7,0	1536	2,1	2,7	9,7	1680	73
200	M3BP 355SMC 6	3GBP353230-••K	995	96,20	96,40	96,10	0,82	367	7,3	1920	2,3	2,8	11,3	1820	73
250	M3BP 355MLB 6	3GBP353420-••K	995	96,40	96,60	96,50	0,83	456	7,1	2399	2,3	2,7	13,5	2180	73
315	M3BP 355LKA 6	3GBP353810-••K	994	96,50	96,70	96,40	0,83	576	6,9	3026	2,3	2,6	15,5	2500	76
355	M3BP 355LKB 6	3GBP353820-••K	995	96,50	96,60	96,10	0,81	668	7,7	3407	2,7	2,9	16,5	2600	76

Output kW	Motor type	Product code	Speed r/min	Efficiency IEC 60034-30-1; 2014 Full load 100%	3/4 load 75%	1/2 load 50%	Power factor Cosφ	Current I_N A	I_s/I_N	Torque T_N Nm	T_i/T_N	T_b/T_N	Moment of inertia J = 1/4 GD²kgm²	Weight kg	Sound pressure Level L_{PA} dB
1000 r/min = 6 poles				**400 V 50 Hz**				**High-output design**							
160	M3BP 315LKC 6	3GBP313830-••K	994	96,10	96,30	96,20	0,82	297	7,4	1537	2,7	2,9	9,2	1600	68

Technical data, 460 V 60 Hz

IE3 cast iron motors

IP 55 - IC 411 - Insulation class F, temperature rise class B
IE3 efficiency class according to IEC 60034-30-1; 2014

Output kW	Motor type	Product code	Speed r/min	Efficiency IEC 60034-30-1; 2014 Full load 100%	3/4 load 75%	1/2 load 50%	Power factor Cosφ	Current I_N A	I_s/I_N	Torque T_N Nm	T_l/T_N	T_b/T_N	Moment of inertia J = 1/4 GD²kgm²	Weight kg	Sound pressure Level L_{PA} dB
3600 r/min = 2 poles				**460 V 60 Hz**				**CENELEC-design**							
0.75	M3BP 80MD 2	3GBP081340-••K	3484	81,9	80,9	77,4	0,86	1,33	7,4	2	3,3	4,2	0,0012	18	60
1.1	M3BP 80MG 2	3GBP081370-••K	3478	84,8	84,7	82,9	0,86	1,9	7,6	3	3,5	4,3	0,0014	19	60
1.5	M3BP 90LB 2	3GBP091520-••K	3506	86,4	86,1	83,7	0,89	2,4	8,5	4	2,1	3,8	0,0031	31	72
2.2	M3BP 90LC 2	3GBP091530-••K	3513	87,1	86,6	84,3	0,89	3,6	10,6	6	3,6	4,8	0,0044	35	67
3	M3BP 100LKA 2	3GBP101810-••K	3516	88,6	88,3	86,1	0,89	4,7	10,0	8,2	3,4	5,0	0,0086	50	71
4	M3BP 112MG 2	3GBP111370-••K	3501	89,4	89,6	90,1	0,93	6	9,7	10,9	3,0	4,9	0,0132	56	73
5.5	M3BP 132SMF 2	3GBP131260-••K	3512	90,1	89,9	88,2	0,90	8,4	8,3	15	2,8	4,8	0,0218	77	70
7.5	M3BP 132SMG 2	3GBP131270-••K	3518	91,6	91,6	90,6	0,90	11,5	9,3	20,4	3,3	5,4	0,0218	77	73
11	M3BP 160MLA 2	3GBP161410-••K	3552	91,8	91,8	90,6	0,91	16,5	9,2	29,5	2,9	3,8	0,052	141	73
15	M3BP 160MLB 2	3GBP161420-••K	3552	92,3	92,5	91,5	0,92	22,1	9,6	40,3	3,3	3,8	0,062	170	73
18.5	M3BP 160MLC 2	3GBP161430-••K	3551	92,9	93,1	92,4	0,93	26,8	9,5	49,7	3,4	4,0	0,072	183	73
22	M3BP 180MLA 2	3GBP181410-••K	3563	92,9	93,0	92,2	0,91	32,5	9,2	58,9	2,8	3,6	0,116	234	73
30	M3BP 200MLA 2	3GBP201410-••K	3563	93,5	93,5	92,7	0,90	44,5	8,8	80,4	2,9	3,5	0,196	289	76
37	M3BP 200MLB 2	3GBP201420-••K	3566	94,0	94,2	93,4	0,91	54	10,0	99	3,2	3,8	0,217	314	76
45	M3BP 225SMA 2	3GBP221210-••K	3575	94,4	94,2	93,1	0,89	66,8	8,9	120	3,2	3,3	0,323	409	78
55	M3BP 250SMA 2	3GBP251210-••K	3578	94,4	94,2	93,2	0,89	81,5	9,1	146	2,9	3,6	0,579	452	79
75	M3BP 280SMB 2	3GBP281220-••K	3582	94,9	94,6	93,3	0,87	113	8,2	200	2,2	3,2	0,9	665	80
90	M3BP 280SMC 2	3GBP281230-••K	3582	95,3	95,0	93,8	0,88	133	9,0	240	2,6	3,4	1,15	725	80
110	M3BP 315SMB 2	3GBP311220-••K	3598	95,3	94,9	93,5	0,88	165	7,5	293	1,9	2,9	1,4	940	80
132	M3BP 315SMC 2	3GBP311230-••K	3586	95,7	95,4	94,2	0,88	197	8,9	351	2,4	3,3	1,7	1025	80
160	M3BP 315MLA 2	3GBP311410-••K	3584	95,7	95,6	94,8	0,90	233	8,2	426	2,2	3,0	2,1	1190	80
200	M3BP 355SMA 2	3GBP351210-••K	3586	96,1	95,8	94,8	0,88	295	8,5	533	2,0	3,4	3	1600	86
250	M3BP 355SMB 2	3GBP351220-••K	3585	96,1	95,8	94,8	0,90	363	8,5	666	2,3	3,3	3,4	1680	86
315	M3BP 355SMC 2	3GBP351230-••K	3586	96,1	95,8	94,8	0,89	466	8,7	839	2,3	3,1	3,6	1750	86
355	M3BP 355MLA 2	3GBP351410-••K	3583	96,1	95,9	94,9	0,90	518	8,5	944	2,3	2,9	4,1	2000	86

Output kW	Motor type	Product code	Speed r/min	Efficiency IEC 60034-30-1; 2014 Full load 100%	3/4 load 75%	1/2 load 50%	Power factor Cosφ	Current I_N A	I_s/I_N	Torque T_N Nm	T_l/T_N	T_b/T_N	Moment of inertia J = 1/4 GD²kgm²	Weight kg	Sound pressure Level L_{PA} dB
3600 r/min = 2 poles				**460 V 60 Hz**				**High-output design**							
200	M3BP 315MLB 2	3GBP311420-••K	3584	96,1	96,1	95,5	0,90	290	7,7	533	2,0	2,9	2,2	1220	80
250	M3BP 315LKB 2	3GBP311820-••K	3583	96,1	96,1	95,8	0,91	359	9,0	666	2,6	3,0	2,9	1540	80

Technical data, 460 V 60 Hz

IE3 cast iron motors

IP 55 - IC 411 - Insulation class F, temperature rise class B
IE3 efficiency class according to IEC 60034-30-1; 2014

Output kW	Motor type	Product code	Speed r/min	Efficiency IEC 60034-30-1; 2014 Full load 100%	3/4 load 75%	1/2 load 50%	Power factor Cosφ	Current I_N A	I_s/I_N	Torque T_N Nm	T_l/T_N	T_b/T_N	Moment of inertia J = 1/4 GD²kgm²	Weight kg	Sound pressure Level L_{PA} dB
1800 r/min = 4 poles				**460 V 60 Hz**				**CENELEC-design**							
0.55	M3BP 80MLD 4	3GBP082440-••K	1747	83,9	84,0	82,1	0,79	1,03	7,6	3	3,1	4,0	0,0028	20	48
0.75	M3BP 80MLG 4	3GBP082470-••K	1752	85,4	84,9	82,1	0,77	1,43	8,4	4,1	3,6	4,6	0,0033	22	53
1.1	M3BP 90LC 4	3GBP092530-••K	1752	87,4	86,9	84,4	0,77	2	8,4	6	3,0	4,4	0,0067	33	59
1.5	M3BP 90LD 4	3GBP092540-••K	1750	88,0	87,6	85,4	0,76	2,8	9,1	8,2	3,7	5,3	0,0072	34	59
2.2	M3BP 100LKA 4	3GBP102810-••K	1761	89,9	90,2	89,2	0,82	3,7	8,6	11,92	2,3	4,5	0,0146	49	59
3	M3BP 100LKB 4	3GBP102820-••K	1757	90,2	90,3	89,0	0,82	5,1	8,8	16,3	2,5	4,7	0,0146	49	61
4	M3BP 112MG 4	3GBP112370-••K	1760	89,8	89,7	88,3	0,74	7,6	8,8	21,7	3,8	4,4	0,0176	52	62
5.5	M3BP 132SMF 4	3GBP132260-••K	1767	91,8	92,1	91,5	0,80	9,4	8,3	29,68	2,6	3,9	0,0401	81	70
7.5	M3BP 132SMG 4	3GBP132270-••K	1763	91,8	92,2	91,7	0,80	12,8	8,4	40,8	2,6	3,9	0,0401	81	67
11	M3BP 160MLA 4	3GBP162410-••K	1777	92,7	92,9	92,1	0,83	17,9	8,7	59,1	2,8	3,3	0,108	173	66
15	M3BP 160MLB 4	3GBP162420-••K	1778	93,1	93,4	92,6	0,83	24,3	8,9	80,5	3,0	3,7	0,125	187	66
18.5	M3BP 180MLA 4	3GBP182410-••K	1782	93,6	93,9	93,2	0,81	30,6	8,5	99,1	3,2	3,4	0,217	235	66
22	M3BP 180MLB 4	3GBP182420-••K	1783	93,8	94,2	93,7	0,82	35,8	9,3	117	3,0	3,4	0,217	235	66
30	M3BP 200MLA 4	3GBP202410-••K	1786	94,7	94,8	94,1	0,83	47,9	9,4	160	3,3	3,7	0,366	319	67
37	M3BP 225SMA 4	3GBP222210-••K	1784	95,3	95,5	94,9	0,85	57,3	8,8	198	2,9	3,4	0,536	398	70
45	M3BP 225SMB 4	3GBP222220-••K	1785	95,3	95,4	94,8	0,84	70,5	8,9	240	3,0	3,6	0,536	398	70
55	M3BP 250SMA 4	3GBP252210-••K	1787	95,7	95,8	95,2	0,84	85,8	9,1	293	3,3	3,7	0,933	476	71
75	M3BP 280SMB 4	3GBP282220-••K	1788	95,9	95,7	94,7	0,84	117	8,4	401	2,7	3,1	1,5	665	75
90	M3BP 280SMC 4	3GBP282230-••K	1788	96,1	95,9	95,0	0,84	140	9,0	481	3,1	3,3	1,85	725	75
110	M3BP 315SMC 4	3GBP312230-••K	1792	96,1	96,0	95,3	0,84	172	8,8	586	2,6	3,4	2,9	1000	71
132	M3BP 315SMD 4	3GBP312240-••K	1791	96,4	96,3	95,6	0,84	206	9,0	704	2,8	3,6	3,2	1065	71
160	M3BP 315MLB 4	3GBP312420-••K	1791	96,4	96,4	95,9	0,86	241	9,0	853	2,9	3,3	3,9	1220	71
200	M3BP 355SMA 4	3GBP352210-••K	1792	96,4	96,2	95,4	0,87	301	8,3	1065	2,2	3,0	5,9	1610	77
250	M3BP 355SMB 4	3GBP352220-••K	1792	96,7	96,6	96,0	0,86	381	8,8	1332	2,7	3,2	6,9	1780	77
315	M3BP 355SMC 4	3GBP352230-••K	1791	96,7	96,6	96,1	0,85	479	8,5	1679	3,1	3,2	7,2	1820	77
355	M3BP 355MLA 4	3GBP352410-••K	1792	96,7	96,5	95,9	0,86	542	9,0	1890	2,9	3,2	8,4	2140	81

Output kW	Motor type	Product code	Speed r/min	Efficiency IEC 60034-30-1; 2014 Full load 100%	3/4 load 75%	1/2 load 50%	Power factor Cosφ	Current I_N A	I_s/I_N	Torque T_N Nm	T_l/T_N	T_b/T_N	Moment of inertia J = 1/4 GD²kgm²	Weight kg	Sound pressure Level L_{PA} dB
1800 r/min = 4 poles				**460 V 60 Hz**				**High-output design**							
200	M3BP 315LKB 4	3GBP312820-••K	1791	96,4	96,4	95,9	0,87	301	8,7	1066	2,7	3,2	5	1520	77
250	M3BP 315LKC 4	3GBP312830-••K	1791	96,7	96,7	96,4	0,86	376	8,9	1332	2,5	3,3	5,5	1600	77

Technical data, 400 V 50 Hz

IE4 cast iron motors

IP 55 - IC 411 - Insulation class F, temperature rise class B
IE4 efficiency class according to IEC 60034-30-1; 2014

Output kW	Motor type	Product code	Speed r/min	Efficiency IEC 60034-30-1; 2014 Full load 100%	3/4 load 75%	1/2 load 50%	Power factor Cosφ	Current I_N A	I_s/I_N	Torque T_N Nm	T_l/T_N	T_b/T_N	Moment of inertia J = 1/4 GD²kgm²	Weight kg	Sound pressure Level L_{PA} dB
3000 r/min = 2 poles				**400 V 50 Hz**				**CENELEC-design**							
75	M3BP 280SMB 2	3GBP281220-••M	2980	96,3	96,3	95,8	0,87	129	7,3	240	2,1	2,9	0,9	665	77
90	M3BP 280SMC 2	3GBP281230-••M	2981	96,5	96,4	95,9	0,88	153	8,0	288	2,5	3,1	1,15	725	77
110	M3BP 315SMB 2	3GBP311220-••M	2982	96,5	96,5	95,9	0,88	189	6,7	352	1,9	2,6	1,4	940	77
132	M3BP 315SMC 2	3GBP311230-••M	2986	96,9	97,0	96,7	0,88	226	7,9	422	2,4	3,0	1,7	1025	77
160	M3BP 315MLA 2	3GBP311410-••M	2983	97,1	97,3	97,1	0,90	268	7,3	512	2,2	2,7	2,1	1190	77
200	M3BP 315MLB 2	3GBP311420-••M	2983	97,1	97,4	97,3	0,90	333	6,8	640	1,9	2,6	2,2	1220	77
200	M3BP 355SMA 2	3GBP351210-••M	2985	97,0	96,8	96,1	0,90	336	7,6	640	2,0	3,1	3	1600	83
250	M3BP 315LKB 2	3GBP311820-••M	2982	96,9	97,2	97,2	0,91	413	7,9	800	2,5	2,7	2,9	1540	77
250	M3BP 355SMB 2	3GBP351220-••M	2983	97,3	97,4	97,1	0,90	415	7,6	800	2,2	3,0	3,4	1680	83
315	M3BP 355SMC 2	3GBP351230-••M	2984	96,8	96,8	96,3	0,89	533	7,8	1008	2,3	2,8	3,6	1750	83
355	M3BP 355MLA 2	3GBP351410-••M	2981	96,9	97,1	96,8	0,90	595	7,5	1137	2,3	2,6	4,1	2000	83

Output kW	Motor type	Product code	Speed r/min	Efficiency IEC 60034-30-1; 2014 Full load 100%	3/4 load 75%	1/2 load 50%	Power factor Cosφ	Current I_N A	I_s/I_N	Torque T_N Nm	T_l/T_N	T_b/T_N	Moment of inertia J = 1/4 GD²kgm²	Weight kg	Sound pressure Level L_{PA} dB
1500 r/min = 4 poles				**400 V 50 Hz**				**CENELEC-design**							
75	M3BP 280SMC 4	3GBP282230-••M	1487	96,2	96,6	96,3	0,86	130	7,8	481	2,8	2,9	1,85	725	72
90	M3BP 280MLA 4	3GBP282410-••M	1489	96,4	96,8	96,7	0,85	160	8,8	577	3,4	3,2	2,3	840	72
110	M3BP 315SMC 4	3GBP312230-••M	1491	96,8	97,0	96,7	0,85	194	7,8	704	2,4	3,1	2,9	1000	68
132	M3BP 315SMD 4	3GBP312240-••M	1490	96,9	97,1	96,8	0,85	234	7,9	846	2,6	3,2	3,2	1065	68
160	M3BP 315MLB 4	3GBP312420-••M	1490	96,7	96,9	96,6	0,87	278	7,9	1026	2,7	3,0	3,9	1220	68
200	M3BP 315LKB 4	3GBP312820-••M	1490	96,9	97,1	97,0	0,87	346	7,6	1282	2,5	2,9	5	1520	74
200	M3BP 355SMA 4	3GBP352210-••M	1491	97,0	97,1	96,8	0,87	345	7,3	1282	2,1	2,7	5,9	1610	74
250	M3BP 315LKC 4	3GBP312830-••M	1490	96,9	97,1	97,0	0,87	432	7,8	1601	2,3	3,0	5,5	1600	74
250	M3BP 355SMB 4	3GBP352220-••M	1491	97,1	97,2	97,0	0,87	433	7,8	1601	2,5	2,9	6,9	1780	74
315	M3BP 355SMC 4	3GBP352230-••M	1490	97,2	97,3	97,1	0,86	554	7,4	2017	2,8	2,9	7,2	1820	74
355	M3BP 355MLA 4	3GBP352410-••M	1491	96,9	97,1	96,8	0,87	616	7,9	2274	2,7	2,9	8,4	2140	78

Technical data, 400 V 50 Hz

IE4 cast iron motors

IP 55 - IC 411 - Insulation class F, temperature rise class B
IE4 efficiency class according to IEC 60034-30-1; 2014

Output kW	Motor type	Product code	Speed r/min	Efficiency IEC 60034-30-1; 2014 Full load 100%	3/4 load 75%	1/2 load 50%	Power factor Cosφ	Current I_N A	I_s/I_N	Torque T_N Nm	T_l/T_N	T_b/T_N	Moment of inertia J = 1/4 GD²kgm²	Weight kg	Sound pressure Level L_{PA} dB
1000 r/min = 6 poles				**400 V 50 Hz**				**CENELEC-design**							
45	M3BP 280SMB 6	3GBP283220-••M	992	95,4	95,7	95,3	0,85	80,9	6,9	434	2,4	2,6	2,2	680	65
55	M3BP 280SMC 6	3GBP283230-••M	990	95,4	95,7	95,4	0,85	99,4	6,8	506	2,4	2,6	2,85	725	65
75	M3BP 315SMC 6	3GBP313230-••M	994	96,3	96,5	96,2	0,83	138	7,0	721	2,2	2,8	4,9	1000	67
90	M3BP 315SMD 6	3GBP313240-••M	994	96,0	96,2	95,9	0,81	170	7,2	864	2,4	2,9	4,9	1040	67
110	M3BP 315MLB 6	3GBP313420-••M	994	96,4	96,6	96,4	0,83	202	6,9	1057	2,3	2,7	6,3	1200	68
132	M3BP 315LKA 6	3GBP313810-••M	993	96,4	96,6	96,4	0,82	243	6,9	1269	2,4	2,7	7,3	1410	68
160	M3BP 315LKC 6	3GBP313830-••M	994	96,7	96,9	96,8	0,82	297	7,4	1537	2,7	2,9	9,2	1600	68
160	M3BP 355SMB 6	3GBP353220-••M	995	96,5	96,5	96,1	0,82	294	7,0	1536	2,1	2,7	9,7	1680	73
200	M3BP 355SMC 6	3GBP353230-••M	995	96,5	96,7	96,4	0,82	367	7,3	1920	2,3	2,8	11,3	1820	73
250	M3BP 355MLB 6	3GBP353420-••M	995	96,6	96,8	96,7	0,83	456	7,1	2399	2,3	2,7	13,5	2180	73
315	M3BP 355LKA 6	3GBP353810-••M	994	96,6	96,7	96,5	0,83	576	6,9	3026	2,3	2,6	15,5	2500	76
355	M3BP 355LKB 6	3GBP353820-••M	995	96,7	96,7	96,3	0,81	668	7,7	3407	2,7	2,9	16,5	2600	76

Variant codes

Cast iron motors

Variant codes specify additional options and features to the standard motor. The desired features are listed as three-digit variant codes in the motor order. Note also that there are variants that cannot be used together.

Most of the variant codes apply to IE2, IE3, and IE4 motors. However, confirm the availability of variants for IE3 and IE4 motors with your ABB sales office before making an order.

		Frame size															
Code/Variants		**71**	**80**	**90**	**100**	**112**	**132**	**160**	**180**	**200**	**225**	**250**	**280**	**315**	**355**	**400**	**450**
Administration																	
530	Two-year extension on standard warranty	●	●	●	●	●	●	●	●	●	●	●	●	●	●	●	●
531	Sea freight packing	●	●	●	●	●	●	●	●	●	●	●	●	●	●	●	●
532	Packing of motor in vertical mounting position	-	-	-	-	-	-	-	-	●	●	●	●	●	-	-	-
533	Wooden sea freight packing	●	●	●	●	●	●	●	●	●	●	●	●	●	●	●	●
590	Mounting of customer supplied part other than coupling.	-	●	●	●	●	●	●	●	●	●	●	●	●	●	●	-
Balancing																	
417	Vibration acc. to Grade B (IEC 60034-14).	●	●	●	●	●	●	●	●	●	●	●	●	●	●	●	●
423	Balanced without key.	●	●	●	●	●	●	●	●	●	●	●	●	●	●	●	●
424	Full-key balancing	●	●	●	●	●	●	●	●	●	●	●	●	●	●	●	●
Bearings and Lubrication																	
036	Transport lock for bearings.	●	●	●	●	●	●	●	●	●	●	●	●	●	●	●	●
037	Roller bearing at D-end.	●	●	●	●	●	●	●	●	●	●	●	●	●	●	●	●
039	Cold-resistant grease	●	●	●	●	●	●	●	●	●	●	●	●	●	●	●	●
040	Heat-resistant grease	●	●	●	●	●	●	●	●	●	●	●	●	●	●	●	●
041	Bearings regreasable via grease nipples.	●	●	●	●	●	●	○	○	○	○	○	○	○	○	○	○
043	SPM compatible nipples for vibration measurement	●	●	●	●	●	●	○	○	○	○	○	○	○	○	○	○
057	2RS bearings at both ends.	●	●	●	●	●	●	●	●	●	●	●	-	-	-	-	-
058	Angular contact bearing at D-end, shaft force away from bearing.	●	●	●	●	●	●	●	●	●	●	●	●	●	●	●	●
059	Angular contact bearing at N-end, shaft force towards bearing.	-	-	-	-	-	-	-	-	-	-	-	●	●	●	●	●
060	Angular contact bearing at D-end, shaft force towards bearing.	-	-	-	-	-	-	-	-	-	-	-	●	●	●	●	●
061	Angular contact bearing at N-end, shaft force away from bearing.	-	-	-	-	-	-	-	-	-	-	-	●	●	●	●	●
107	Pt100 2-wire in bearings.	-	-	-	-	-	-	●	●	●	●	●	●	●	●	●	●
128	Double PT100, 2-wire in bearings	-	-	-	-	-	-	●	●	●	●	●	●	●	●	●	●
129	Double PT100, 3-wire in bearings	-	-	-	-	-	-	●	●	●	●	●	●	●	●	●	●
130	Pt100 3-wire in bearings.	-	-	-	-	-	-	●	●	●	●	●	●	●	●	●	●
188	63-series bearing in D-end	●	●	●	●	●	●	○	○	○	○	○	○	○	○	○	○
194	2Z bearings greased for life at both ends.	○	○	○	○	○	○	●	●	●	●	●	-	-	-	-	-
420	Bearing mounted PTC thermistors.	-	-	-	-	-	-	-	-	-	-	-	●	●	●	●	●
433	Outlet grease collector	-	-	-	-	-	-	-	-	-	-	-	●	●	●	●	●
506	Nipples for vibration measurement : SKF Marlin Quick Connect stud CMSS-2600-3	-	-	-	-	-	-	●	●	●	●	●	●	●	●	●	●
593	Bearings grease suitable for food and beverage industry.	●	●	●	●	●	●	●	●	●	●	●	●	●	●	●	●
654	Provision for vibration sensors (M8x1)	-	-	-	-	-	-	●	●	●	●	●	●	●	●	●	●
795	Lubrication information plate	-	-	-	-	-	-	●	●	●	●	●	○	○	○	-	-
796	Grease nipples JIS B 1575 PT 1/8 Type A	●	●	●	●	●	●	●	●	●	●	●	●	●	●	●	●
797	Stainless steel SPM nipples	●	●	●	●	●	●	●	●	●	●	●	●	●	●	●	●
798	Stainless steel grease nipples	●	●	●	●	●	●	●	●	●	●	●	●	●	●	●	●
799	Grease nipples flat type DIN 3404, thread M10x1	●	●	●	●	●	●	●	●	●	●	●	●	●	●	●	●
800	Grease nipples JIS B 1575 PT 1/8” pin type	-	-	-	-	-	-	●	●	●	●	●	●	●	●	●	●
Brakes																	
517	KFB holding brake	-	-	-	-	-	-	-	-	-	-	-	●	●	●	-	-
518	SFB-SH holding brake	-	-	-	-	-	-	-	-	-	-	-	●	●	●	●	-
Branch standard designs																	
142	Manilla connection.	-	-	●	●	●	●	●	●	●	●	●	●	●	-	-	-
172	Smoke venting specification, 300 ºC, 1 hour, DOL use, class F300 according to EN 12101-3	-	-	-	-	-	-	-	-	-	-	-	●	●	●	●	-
173	Smoke venting specification, 200 ºC, 2 hours, DOL use, class F200 according to EN 12101-3	-	-	-	-	-	-	-	-	-	-	-	●	●	●	●	-

○ = Included as standard | ● = Available as option | - = Not applicable

		Frame size															
Code/Variants		**71**	**80**	**90**	**100**	**112**	**132**	**160**	**180**	**200**	**225**	**250**	**280**	**315**	**355**	**400**	**450**
174	Smoke venting specification, 400 ºC, 2 hours, DOL use, class F400 according to EN 12101-3	-	-	-	-	-	-	-	-	-	-	-	●	●	●	●	-
177	Design for high ambient applications	-	-	-	-	-	-	●	●	●	●	●	-	-	-	-	-
178	Stainless steel / acid proof bolts.	●	●	●	●	●	●	●	●	●	●	●	●	●	●	●	●
204	Jacking bolts for foot mounted motors.	-	-	-	-	-	-	●	●	●	●	●	●	●	○	○	○
209	Non-standard voltage or frequency, (special winding).	●	●	●	●	●	●	●	●	●	●	●	●	●	●	●	●
386	Smoke venting specification, 200 ºC, 2 hours, VSD use, Class F200 according to EN 12101-3.	-	-	-	-	-	-	-	-	-	-	-	●	●	●	●	-
387	Smoke venting specification, 300 ºC, 1 hour, VSD use, Class F300 according to EN 12101-3	-	-	-	-	-	-	-	-	-	-	-	●	●	●	●	-
389	Smoke Venting specification, 400 ºC, 2 hours, VSD use, Class F400 according to EN 12101-3	-	-	-	-	-	-	-	-	-	-	-	●	●	●	●	-
392	Smoke Venting specification, 250 ºC, 2 hours, DOL use, Class T250	-	-	-	-	-	-	-	-	-	-	-	●	●	●	●	-
393	Smoke venting specification, 250 ºC, 2 hours, VSD use, Class T250	-	-	-	-	-	-	-	-	-	-	-	●	●	●	●	-
396	Motor designed for minimum ambient temperature -20 °C to -40 °C, with space heaters (code 450/451 must be added)	●	●	●	●	●	●	●	●	●	●	●	●	●	●	●	●
397	Motor designed for minimum ambient temperature -40 °C to -55 °C, with space heaters (code 450/451 must be added)	-	-	-	-	-	-	●	●	●	●	●	●	●	●	●	●
398	Motor designed for minimum ambient temperature -20 °C to -40 °C	●	●	●	●	●	●	●	●	●	●	●	●	●	●	●	●
399	Motor designed for minimum ambient temperature -40 °C to -55 °C	-	-	-	-	-	-	●	●	●	●	●	●	●	●	●	●
425	Corrosion protected stator and rotor core.	●	●	●	●	●	●	●	●	●	●	●	●	●	●	●	●
524	Special run-out tolerances on flange and shaft for close coupled pump applications.	-	-	-	-	-	-	-	-	-	-	-	●	●	●	-	-
625	Design for mining applications.	●	●	●	●	●	●	●	●	●	●	●	●	●	●	●	-
786	Special design shaft upwards (V3, V36, V6) for outdoor mounting.	-	-	-	-	-	-	●	●	-	●	●	-	-	-	-	-
877	Design for high ambient applications, motor without fan and fan cover	-	-	-	-	-	-	●	●	●	●	●	-	-	-	-	-
Cooling system																	
044	Unidirectional fan for reduced noise level. Rotation clockwise seen from D-end. Available only for 2-pole motors.	-	-	-	-	-	-	-	-	-	-	-	●	●	●	●	●
045	Unidirectional fan for reduced noise level. Rotation counter clockwise seen from D-end. Available only for 2-pole motors.	-	-	-	-	-	-	-	-	-	-	-	●	●	●	●	●
068	Light alloy metal fan	●	●	●	●	●	●	●	●	●	●	●	●	●	●	●	●
075	Cooling method IC418 (without fan).	●	●	●	●	●	●	●	●	●	●	●	●	●	●	●	●
183	Separate motor cooling (fan axial, N-end).	●	●	●	●	●	●	●	●	●	●	●	●	●	●	●	●
206	Steel fan	●	●	●	●	●	●	●	●	●	●	●	●	●	●	●	-
422	Separate motor cooling (on top) with integrated fan motor	-	-	-	-	-	-	-	-	-	-	-	●	●	●	●	●
514	Separate motor cooling (fan on top)	-	-	-	-	-	-	-	-	-	-	-	●	●	●	●	●
791	Stainless steel fan cover	-	-	-	-	-	-	-	-	-	●	●	●	●	●	●	●
Coupling																	
035	Assembly of customer supplied coupling-half.	-	-	-	-	-	-	-	-	-	-	-	●	●	●	●	●
Documentation																	
141	Binding 2D main dimension drawing.	●	●	●	●	●	●	●	●	●	●	●	●	●	●	●	●
374	Binding 2D motor detailed drawing	●	●	●	●	●	●	●	●	●	●	●	●	●	●	●	●
722	Rotor dimension drawing (incl. torosional stiffness)	●	●	●	●	●	●	●	●	●	●	●	●	●	●	●	●
Drain holes																	
065	Plugged existing drain holes.	●	●	●	●	●	●	●	●	●	●	●	●	●	●	●	●
448	Draining holes with metal plugs.	-	-	-	-	-	-	-	-	-	-	-	●	●	●	●	●
Earthing Bolt																	
067	External earthing bolt.	●	●	●	●	●	●	○	○	○	○	○	○	○	○	○	○
525	External earthing bolts on motor feet	-	●	●	●	●	●	●	●	●	●	●	●	●	●	●	●
Hazardous Environments																	
480	Ex nA II acc. to ATEX directive 2014/34/EU, temp. class T3.	-	-	-	-	-	-	-	-	-	-	-	●	●	●	-	-
Heating elements																	
450	Heating element, 100-120 V	●	●	●	●	●	●	●	●	●	●	●	●	●	●	●	●
451	Heating element, 200 - 240 V	●	●	●	●	●	●	●	●	●	●	●	●	●	●	●	●
Insulation system																	
014	Winding insulation class H.	●	●	●	●	●	●	●	●	●	●	●	●	●	●	●	●
405	Special winding insulation for frequency converter supply.	●	●	●	●	●	●	●	●	●	●	●	●	●	●	●	●
406	Winding insulation for supply > 690 <= 1000 volts	-	-	-	-	-	-	-	-	●	●	●	●	●	●	●	●
Marine																	
024	Fulfilling Bureau Veritas (BV) requirements, with certificate.	●	●	●	●	●	●	●	●	●	●	●	●	●	●	●	●
025	Fulfilling Det Norske Veritas (DNV) requirements, with certificate.	●	●	●	●	●	●	●	●	●	●	●	●	●	●	●	●

○ = Included as standard | ● = Available as option | - = Not applicable

		Frame size															
Code/Variants		**71**	**80**	**90**	**100**	**112**	**132**	**160**	**180**	**200**	**225**	**250**	**280**	**315**	**355**	**400**	**450**
026	Fulfilling Lloyds Register of Shipping (LR) requirements, with certificate.	●	●	●	●	●	●	●	●	●	●	●	●	●	●	●	●
027	Fulfilling American Bureau of Shipping (ABS) requirements, with certificate.	●	●	●	●	●	●	●	●	●	●	●	●	●	●	●	●
049	Fulfilling Germanischer Lloyd (GL) requirements, with certificate.	●	●	●	●	●	●	●	●	●	●	●	●	●	●	●	●
050	Fulfilling Registro Italiano Navale (RINA) requirements, with certificate.	●	●	●	●	●	●	●	●	●	●	●	●	●	●	●	●
051	Fulfilling Russian Maritime Register of Shipping (RS) requirements, with certificate.	●	●	●	●	●	●	●	●	●	●	●	●	●	●	●	●
096	Fulfilling Lloyds Register of Shipping (LR) requirements, without certificate (non-essential duty only)	●	●	●	●	●	●	●	●	●	●	●	●	●	●	●	●
186	Fulfilling Det Norske Veritas (DNV) requirements, without certificate	●	●	●	●	●	●	●	●	●	●	●	●	●	●	●	●
481	Fulfilling Nippon Kaiji Kyokai (NK) requirements, with certificate.	●	●	●	●	●	●	●	●	●	●	●	●	●	●	●	●
483	Fulfilling China Classification Societies (CCS) requirements (Beijing), with certificate.	●	●	●	●	●	●	●	●	●	●	●	●	●	●	●	●
484	Fulfilling Korea Register of Shipping (KR) requirements, with certificate.	●	●	●	●	●	●	●	●	●	●	●	●	●	●	●	●
491	Fulfilling Nippon Kaiji Kyokai (NK) requirements, without certificate.	●	●	●	●	●	●	●	●	●	●	●	●	●	●	●	●
492	Fulfilling Registro Italiano Navale (RINA) requirements, without certificate.	●	●	●	●	●	●	●	●	●	●	●	●	●	●	●	●
493	Fulfilling China Classification Societies (CCS) requirements (Beijing), without certificate.	●	●	●	●	●	●	●	●	●	●	●	●	●	●	●	●
494	Fulfilling Korea Register of Shipping (KR) requirements, without certificate.	●	●	●	●	●	●	●	●	●	●	●	●	●	●	●	●
496	Fulfilling Bureau Veritas (BV) requirements, without certificate(non-essential duty only)	●	●	●	●	●	●	●	●	●	●	●	●	●	●	●	●
497	Fulfilling Russian Maritime Register of Shipping (RS) requirements, without certificate.	●	●	●	●	●	●	●	●	●	●	●	●	●	●	-	-
675	Fulfilling American Bureau of Shipping (ABS) requirements, without certificate (non-essential duty only)	●	●	●	●	●	●	●	●	●	●	●	●	●	●	●	●
676	Fulfilling Germanischer Lloyd (GL) requirements, without certificate (non-essential duty only)	●	●	●	●	●	●	●	●	●	●	●	●	●	●	●	●
Mounting arrangements																	
008	IM 2101 foot/flange mounted, IEC flange, from IM 1001 (B34 from B3).	●	●	●	●	●	●	-	-	-	-	-	-	-	-	-	-
009	IM 2001 foot/flange mounted, IEC flange, from IM 1001 (B35 from B3).	●	●	●	●	●	●	●	●	●	●	●	●	●	●	●	●
047	IM 3601 flange mounted, IEC flange, from IM 3001 (B14 from B5).	●	●	●	●	●	●	-	-	-	-	-	-	-	-	-	-
064	NEMA D-flange	-	-	-	-	-	-	-	-	-	-	-	-	-	●	-	-
066	Modified for specified mounting position differing from IM B3 (1001), IM B5 (3001), B14 (3601), IM B35 (2001), IM B34 (2101)	●	●	●	●	●	●	●	●	●	●	●	●	●	●	●	●
305	Additional lifting lugs.	-	-	-	-	-	-	●	●	●	●	●	●	●	●	●	●
Noise reduction																	
055	Noise reduction cover for foot mounted motor	-	-	-	-	-	-	-	-	-	-	-	●	●	●	●	●
Painting																	
105	Paint thickness report.	●	●	●	●	●	●	●	●	●	●	●	●	●	●	●	●
114	Special paint color, standard grade	●	●	●	●	●	●	●	●	●	●	●	●	●	●	●	●
115	Painting system C4M acc. to ISO 12944-2: 1998.	●	●	●	●	●	●	●	●	●	●	●	●	●	●	●	●
168	Primer paint only.	●	●	●	●	●	●	●	●	●	●	●	●	●	●	●	●
303	Painted insulation layer on inside of the terminal boxes.	-	-	-	-	-	-	●	●	●	●	●	-	-	-	-	-
710	Thermally sprayed zink metallizing with acrylic top coat	●	●	●	●	●	●	●	●	●	●	●	●	●	●	●	●
711	Painting system C5-M very high, acc. to ISO 12944-2:1998	●	●	●	●	●	●	●	●	●	●	●	●	●	●	●	●
712	Painting system C5-M according to Petrobras specification.	●	●	●	●	●	●	●	●	●	●	●	●	●	●	●	●
713	Painting system according Total Egina specification.	-	-	-	-	-	-	●	●	●	●	●	●	●	●	●	●
754	Painting system C5M acc. to ISO 12944-2:1998	●	●	●	●	●	●	●	●	●	●	●	●	●	●	●	●
755	Norsok M-501 revision 6, Coating system no. 1	-	-	-	-	-	-	●	●	●	●	●	●	●	●	●	●
Protection																	
005	Protective roof.	●	●	●	●	●	●	●	●	●	●	●	●	●	●	●	●
072	Radial seal at D-end. Not possible for 2-pole , 280 and 315 frames	●	●	●	●	●	●	●	●	●	●	●	●	●	-	-	-
073	Sealed against oil at D-end.	-	-	-	-	-	-	●	●	●	●	●	●	●	●	●	●
158	Degree of protection IP65.	●	●	●	●	●	●	●	●	●	●	●	●	●	●	●	●
211	Weather protected, IP xx W	●	●	●	●	●	●	●	●	●	●	●	-	-	-	-	-
250	Degree of protection IP66	●	●	●	●	●	●	●	●	●	●	●	●	●	●	●	●
401	Protective roof, horizontal motor.	-	-	-	-	-	-	-	-	-	-	-	●	●	●	●	●
403	Degree of protection IP56.	●	●	●	●	●	●	●	●	●	●	●	●	●	●	●	●
404	Degree of protection IP56, without fan and fan cover.	●	●	●	●	●	●	●	●	●	●	●	-	-	-	-	-

○ = Included as standard | ● = Available as option | - = Not applicable

		Frame size															
Code/Variants		**71**	**80**	**90**	**100**	**112**	**132**	**160**	**180**	**200**	**225**	**250**	**280**	**315**	**355**	**400**	**450**
434	Degree of protection IP56, open deck.	-	-	-	-	-	-	-	-	-	-	-	●	●	●	●	●
520	Motor protection cover made of glass fiber. Vertical motor, shaft down.	-	-	-	-	-	-	-	-	-	-	-	●	●	●	●	-
783	Labyrinth sealing at D-end.	-	-	-	-	-	-	●	●	●	●	●	●	●	○	○	○
784	Gamma-seal at D-end.	●	●	●	●	●	●	○	○	○	○	○	-	-	-	-	-
Rating & instruction plates																	
002	Restamping voltage, frequency and output, continuous duty.	●	●	●	●	●	●	●	●	●	●	●	●	●	●	●	●
004	Additional text on std rating plate (max 12 digits on free text line).	●	●	●	●	●	●	●	●	●	●	●	●	●	●	●	●
095	Restamping output (maintained voltage, frequency), intermittent duty.	●	●	●	●	●	●	●	●	●	●	●	●	●	●	●	●
098	Stainless rating plate.	●	●	●	●	●	●	○	○	○	○	○	○	○	○	-	-
126	Tag plate	●	●	●	●	●	●	●	●	●	●	●	●	●	●	●	●
135	Mounting of additional identification plate, stainless.	●	●	●	●	●	●	●	●	●	●	●	●	●	●	●	●
138	Mounting of additional identification plate, aluminium.	●	●	●	●	●	●	-	-	-	-	-	-	-	-	-	-
139	Additional identification plate delivered loose.	●	●	●	●	●	●	●	●	●	●	●	●	●	●	●	●
159	Additional plate with text “Made in ....”	●	●	●	●	●	●	●	●	●	●	●	●	●	●	●	●
160	Additional rating plate affixed.	●	●	●	●	●	●	●	●	●	●	●	●	●	●	●	●
161	Additional rating plate delivered loose.	●	●	●	●	●	●	●	●	●	●	●	●	●	●	●	●
163	Frequency converter rating plate. Rating data according to quotation.	●	●	●	●	●	●	●	●	●	●	●	●	●	●	●	●
181	Rating plate with ABB standard loadability values for VSD operation. Other auxiliaries for VSD operation to be selected as necessary.	●	●	●	●	●	●	●	●	●	●	●	●	●	●	●	●
332	Baldor Catalogue #	●	●	●	●	●	●	●	●	●	●	●	●	●	●	-	-
333	Not for use in the USA	●	●	●	●	●	●	●	●	●	●	●	●	●	●	-	-
360	Cargotec rating plate	-	-	-	-	-	-	●	●	●	●	●	●	●	●	●	●
528	Rating plate sticker	●	●	●	●	●	●	-	-	-	-	-	●	●	●	●	●
Shaft & rotor																	
069	Two shaft extensions according to catalog drawings.	●	●	●	●	●	●	●	●	●	●	●	●	●	●	●	●
070	Special shaft extension at D-End, standard shaft material	●	●	●	●	●	●	●	●	●	●	●	●	●	●	●	●
131	Motor delivered with half key (key not exceeding shaft diameter)	●	●	●	●	●	●	●	●	●	●	●	-	-	-	-	-
155	Cylindrical shaft extension, D-end, without key-way.	●	●	●	●	●	●	●	●	●	●	●	●	●	●	●	●
164	Shaft extension with closed keyway	○	○	○	○	○	○	○	○	○	○	○	●	●	●	●	-
165	Shaft extension with open keyway	-	-	-	-	-	-	●	●	●	●	●	○	○	○	○	○
410	Shaft material stainless steel	●	●	●	●	●	●	●	●	●	●	●	●	●	●	●	●
591	Special shaft extension according to customer specification.	●	●	●	●	●	●	●	●	●	●	●	●	●	●	●	●
600	Special shaft extension at N-end, standard shaft material.	●	●	●	●	●	●	●	●	●	●	●	●	●	●	●	●
630	Shaft material certificate 3.1/3.2 according to EN10204:2004	-	-	-	-	-	●	●	●	●	●	●	●	●	●	●	●
Standards and Regulations (Please check the availability of these option in the sales tools since they differ according to IE class)																	
010	Fulfilling CSA Safety Certificate.	-	-	-	-	-	-	●	●	●	●	●	●	●	●	●	●
011	Fulfilling CSA Energy Efficiency Verification IE3 (code 010 included).	-	-	●	●	●	●	●	●	●	●	●	●	●	-	-	-
208	Fulfilling Underwriters Laboratories (UL), listed requirements	●	●	●	●	●	●	●	●	●	●	●	●	●	●	●	●
252	Shell DEP 33.66.05.31-GEN. February 2012, with standard winding >55 kW.	-	-	-	-	-	-	-	-	-	-	-	●	●	●	-	-
331	IE1 motor not for sale for use in EU	●	●	●	●	●	●	●	●	●	●	●	●	●	●	●	●
500	Fulfilling Korean MEPS efficiency regulations	-	-	-	-	-	●	●	●	-	-	-	-	-	-	-	-
509	Fulfilling US Integral Horsepower Motor Rule (IHP).	-	●	●	●	●	●	●	●	●	●	●	●	●	●	-	-
540	China energy label	●	●	●	●	●	●	●	●	●	●	●	●	●	●	-	-
542	NBR design	●	●	●	●	●	●	●	●	●	●	●	●	●	●	-	-
543	Australian MEPS	-	●	●	●	●	●	●	●	●	●	●	●	●	●	-	-
544	Australian HE MEPS	-	●	●	●	●	●	●	●	●	●	●	●	●	●	-	-
546	SABS rating plate	●	●	●	●	●	●	●	●	●	●	●	●	●	●	●	-
548	Certificate of conformity according TR-CU 004/2011 for customs union RU, KZ, BY, AM, KG.	●	●	●	●	●	●	●	●	●	●	●	●	●	●	●	●
558	Saudi Arabian MEPS (SASO)	●	●	●	●	●	●	●	●	●	●	●	●	●	●	-	-
822	WIMES 3.03i6 Compliant Design for DOL operation	●	●	●	●	●	●	-	-	-	-	-	-	-	●	●	●
823	WIMES 3.03i6 Compliant Design for VSD operation	●	●	●	●	●	●	●	●	●	●	●	●	●	●	●	●
Stator winding temperature sensors																	
120	KTY 84-130 (1 per phase) in stator winding.	-	-	-	-	-	-	●	●	●	●	●	●	●	●	●	●
121	Bimetal detectors, break type (NCC), (3 in series), 130 ºC, in stator winding	●	●	●	●	●	●	●	●	●	●	●	●	●	●	●	●
122	Bimetal detectors, break type (NCC), (3 in series), 150 ºC, in stator winding	●	●	●	●	●	●	●	●	●	●	●	●	●	●	●	●
123	Bimetal detectors, break type (NCC), (3 in series), 170 ºC, in stator winding	●	●	●	●	●	●	●	●	●	●	●	●	●	●	●	●

○ = Included as standard | ● = Available as option | - = Not applicable

		Frame size															
Code/Variants		**71**	**80**	**90**	**100**	**112**	**132**	**160**	**180**	**200**	**225**	**250**	**280**	**315**	**355**	**400**	**450**
124	Bimetal detectors, break type (NCC), (3 in series), 140 ºC, in stator winding	-	-	-	-	-	-	●	●	●	●	●	●	●	●	●	●
125	Bimetal detectors, break type (NCC), (2x3 in series), 150 ºC, in stator winding	-	-	-	-	-	-	●	●	●	●	●	●	●	●	●	●
127	Bimetal detectors, break type (NCC), (3 in series, 130 ºC & 3 in series, 150 ºC), in stator winding	●	●	●	●	●	●	●	●	●	●	●	●	●	●	●	●
328	PTC - thermistors (3 in series), 120ºC, in stator winding	-	-	-	-	-	-	●	●	●	●	●	-	-	-	-	-
435	PTC - thermistors (3 in series), 130 ºC, in stator winding	●	●	●	●	●	●	●	●	●	●	●	●	●	●	●	●
437	PTC - thermistors (3 in series), 170 ºC, in stator winding	●	●	●	●	●	●	●	●	●	●	●	●	●	●	●	●
438	PTC - thermistors (3 in series), 190 ºC, in stator winding	-	-	-	-	-	-	-	-	-	-	-	●	●	●	●	●
439	PTC - thermistors (2x3 in series), 150 ºC, in stator winding	●	●	●	●	●	●	●	●	●	●	●	●	●	●	●	●
441	PTC - thermistors (3 in series, 130 ºC & 3 in series, 150 ºC), in stator winding	●	●	●	●	●	●	●	●	●	●	●	●	●	●	●	●
442	PTC - thermistors (3 in series, 150 ºC & 3 in series, 170 ºC), in stator winding	●	●	●	●	●	●	●	●	●	●	●	●	●	●	●	●
445	Pt100 2-wire in stator winding, 1 per phase	●	●	●	●	●	●	●	●	●	●	●	●	●	●	●	●
446	Pt100 2-wire in stator winding, 2 per phase	-	-	-	-	-	-	●	●	●	●	●	●	●	●	●	●
502	Pt100 3-wire in stator winding, 1 per phase	-	-	-	-	-	-	●	●	●	●	●	●	●	●	●	●
503	Pt100 3-wire in stator winding, 2 per phase	-	-	-	-	-	-	●	●	●	●	●	●	●	●	●	●
511	PTC thermistors (2 x 3 in series), 130 ºC, in stator winding	-	-	-	-	-	-	●	●	●	●	●	●	●	●	●	●
515	Pt100 3-wire in stator winding, 3 per phase	-	-	-	-	-	-	-	-	-	-	-	●	●	●	●	●
Terminal box																	
015	Motor supplied in D connection.	●	●	●	●	●	●	●	●	●	●	●	-	-	-	-	-
017	Motor supplied in Y connection.	●	●	●	●	●	●	●	●	●	●	●	-	-	-	-	-
019	Larger than standard terminal box.	●	●	●	●	●	●	-	-	-	-	-	●	●	●	●	-
020	Detached terminal box.	-	-	-	-	-	-	●	●	●	●	●	●	●	●	●	●
021	Terminal box LHS (seen from D-end).	●	●	●	●	●	●	●	●	●	●	●	●	●	●	●	-
022	Cable entry LHS (seen from D-end).	●	●	●	●	●	●	●	●	●	●	●	●	●	●	●	●
157	Terminal box degree of protection IP65.	-	-	-	-	-	-	●	●	●	●	●	●	●	●	●	-
180	Terminal box RHS (seen from D-end).	●	●	●	●	●	●	●	●	●	●	●	●	●	●	●	-
230	Standard metal cable gland.	●	●	●	●	●	●	●	●	●	●	●	●	●	●	-	-
277	Cable sealing end unit, size small for C-opening	-	-	-	-	-	-	-	-	-	-	-	●	-	-	-	-
278	Cable sealing end unit, size medium for D-opening	-	-	-	-	-	-	-	-	-	-	-	-	●	●	●	●
279	Cable sealing end unit, size large for D-opening	-	-	-	-	-	-	-	-	-	-	-	-	●	●	●	●
292	Adapter C-C	-	-	-	-	-	-	-	-	-	-	-	●	-	-	-	-
293	Adapter D-D	-	-	-	-	-	-	-	-	-	-	-	-	●	●	-	-
294	Adapter E-D	-	-	-	-	-	-	-	-	-	-	-	-	●	●	●	●
295	Adapter E-2D	-	-	-	-	-	-	-	-	-	-	-	-	●	●	●	○
296	Adapter E-3D	-	-	-	-	-	-	-	-	-	-	-	-	-	-	●	●
351	Terminal block turned according to cable entry	-	-	-	-	-	-	-	-	-	-	-	●	●	-	●	●
375	Standard plastic cable gland	●	●	●	●	●	●	●	●	●	●	●	-	-	-	-	-
376	Two standard plastic cable glands	●	●	●	●	●	●	●	●	●	●	●	-	-	-	-	-
380	Separate terminal box for temperature detectors, std. material	-	-	-	-	-	-	●	●	●	●	●	●	●	●	●	●
400	4 x 90 degr turnable terminal box.	●	●	●	●	●	●	○	○	○	○	○	○	○	○	-	-
413	Extended cable connection, no terminal box.	-	-	-	-	-	-	●	●	●	●	●	●	●	●	●	●
418	Separate terminal box for auxiliaries, standard material.	●	●	●	●	●	●	●	●	●	●	●	●	●	●	●	●
444	Adapter E-2E	-	-	-	-	-	-	-	-	-	-	-	-	-	-	-	●
447	Top mounted separate terminal box for monitoring equipment.	-	-	-	-	-	-	-	-	-	-	-	●	●	●	●	●
466	Terminal box at N-end.	-	-	-	-	-	-	●	●	●	●	●	●	●	●	●	●
467	Lower than standard terminal box and rubber extended cable. Cable length 2 m	-	-	-	-	-	-	●	●	●	●	●	-	-	-	-	-
468	Cable entry from D-end.	●	●	●	●	●	●	-	-	-	-	-	●	●	●	●	-
469	Cable entry from N-end.	●	●	●	●	●	●	●	●	●	●	●	●	●	●	●	-
526	Existing cable entries plugged	○	○	○	○	○	○	○	○	○	○	○	○	●	●	-	-
553	Terminal box degree of protection IP66.	●	●	●	●	●	●	●	●	●	●	●	●	●	●	●	-
554	Painted steel flange for cable glands drilled and tapped according to order.	-	-	-	-	-	-	●	●	●	●	●	●	●	●	●	●
555	Aluminum flange for cable glands drilled and tapped according to order.	-	-	-	-	-	-	●	●	●	●	●	●	●	●	●	●
557	Nickel plated cable glands mounted according to order.	-	●	●	●	●	●	●	●	●	●	●	●	●	●	●	●
565	Adapter for terminal box on the side (RHS)	-	-	-	-	-	-	-	-	-	●	●	●	●	●	●	-
566	Adapter for terminal box on the side (LHS)	-	-	-	-	-	-	-	-	-	●	●	●	●	●	●	-
567	Separate terminal box material: cast Iron	-	-	-	-	-	-	○	○	○	○	○	●	●	●	●	●
568	Separate terminal box for heating elements, std. material	-	-	-	-	-	-	●	●	●	●	●	●	●	●	●	●

○ = Included as standard | ● = Available as option | - = Not applicable

		Frame size															
Code/Variants		**71**	**80**	**90**	**100**	**112**	**132**	**160**	**180**	**200**	**225**	**250**	**280**	**315**	**355**	**400**	**450**
569	Separate terminal box for brakes	-	-	-	-	-	-	●	●	●	●	●	●	●	●	●	●
624	Prepared for inch cable glands according to BSPP standard.	●	●	●	●	●	●	●	●	●	●	●	●	●	●	●	●
727	Stainless steel flange for cable glands drilled and tapped according to order.	-	-	-	-	-	-	●	●	●	●	●	●	●	●	●	●
729	Aluminum non-drilled flange for cable glands	-	-	-	-	-	-	●	●	●	●	●	●	●	●	●	●
730	Prepared for NPT cable glands.	●	●	●	●	●	●	●	●	●	●	●	●	●	●	●	●
731	Two standard metal cable glands.	●	●	●	●	●	●	●	●	●	●	●	●	●	●	●	●
740	Prepared for PG cable glands.	-	-	-	-	-	-	●	●	●	●	●	-	-	-	-	-
742	Protective cover for accessory terminal block in main terminal box.	-	-	-	-	-	-	-	-	-	-	-	●	●	●	●	●
743	Painted non-drilled flange in steel for cable glands	-	-	-	-	-	-	●	●	●	●	●	●	●	●	●	●
744	Stainless steel non-drilled flange for cable glands.	-	-	-	-	-	-	●	●	●	●	●	●	●	●	●	●
745	Painted steel flange equipped with nickel plated brass cable glands	-	-	-	-	-	-	●	●	●	●	●	●	●	●	●	●
746	Stainless steel cable flange equipped with standard nickel plated brass cable glands	-	-	-	-	-	-	●	●	●	●	●	●	●	●	●	●
Testing																	
145	Type test report from a catalogue motor, 400V 50Hz.	●	●	●	●	●	●	●	●	●	●	●	●	●	●	●	●
146	Type test with report for one motor from specific delivery batch.	●	●	●	●	●	●	●	●	●	●	●	●	●	●	●	●
148	Routine test report.	●	●	●	●	●	●	●	●	●	●	●	●	●	●	●	●
149	Test according to separate test specification.	-	-	-	-	-	-	●	●	●	●	●	-	-	-	-	-
150	Customer witnessed testing. Specify test procedure with other codes.	●	●	●	●	●	●	●	●	●	●	●	●	●	●	●	●
153	Reduced test for classification society.	-	-	-	-	-	-	●	●	●	●	●	-	-	-	-	-
222	Torque/speed curve, type test and multi-point load test with report for one motor from specific delivery batch.	●	●	●	●	●	●	●	●	●	●	●	●	●	●	●	●
560	Shaft voltage test.	●	●	●	●	●	●	●	●	●	●	●	●	●	●	●	●
561	Overspeed test.	●	●	●	●	●	●	●	●	●	●	●	●	●	●	●	●
562	Overvoltage test.	●	●	●	●	●	●	●	●	●	●	●	●	●	●	●	●
760	Vibration level test	●	●	●	●	●	●	●	●	●	●	●	●	●	●	●	●
761	Vibration spectrum test for one motor from specific delivery batch.	-	-	-	-	-	-	●	●	●	●	●	●	●	●	●	●
762	Noise level test for one motor from specific delivery batch.	●	●	●	●	●	●	●	●	●	●	●	●	●	●	●	●
763	Noise spectrum test for one motor from specific delivery batch.	-	-	-	-	-	-	●	●	●	●	●	●	●	●	●	●
764	Test for one motor from specific delivery batch with ABB frequency converter available at ABB test field. ABB standard test procedure.	-	-	-	-	-	-	●	●	●	●	●	●	●	●	●	●
Variable speed drives																	
429	Separate motor cooling (fan top, N-end) and 1024 pulse tacho (Leine & Linde 861) mounted.	-	-	-	-	-	-	-	-	-	-	-	●	●	●	●	●
470	Prepared for hollow shaft pulse tacho (L&L equivalent).	-	-	-	-	-	-	●	●	●	●	●	●	●	●	●	●
472	1024 pulse tacho (L&L 861007455-1024).	-	-	-	-	●	●	●	●	●	●	●	●	●	●	●	●
473	2048 pulse tacho (L&L 861007455-2048).	-	-	-	-	●	●	●	●	●	●	●	●	●	●	●	●
474	Separate motor cooling (axial fan, N-end) and prepared for hollow shaft tacho (L&L equivalent)	-	-	-	-	-	-	●	●	●	●	●	●	●	●	●	●
476	Separate motor cooling (axial fan, N-end) and 1024 pulse tacho (L&L 861007455-1024)	-	-	-	-	-	-	●	●	●	●	●	●	●	●	●	●
477	Separate motor cooling (axial fan, N-end) and 2048 pulse tacho (L&L 861007455-2048)	-	-	-	-	-	-	●	●	●	●	●	●	●	●	●	●
478	Separate motor cooling (fan on top, N-end) and prepared for hollow shaft tacho (L&L equivalent)	-	-	-	-	-	-	-	-	-	-	-	●	●	●	●	●
479	Mounting of other type of pulse tacho with shaft extension, tacho not included.	-	-	-	-	-	-	●	●	●	●	●	●	●	●	●	●
486	Separate motor cooling (fan top, N-end) and prepared for DC-tacho.	-	-	-	-	-	-	-	-	-	-	-	●	●	●	●	●
510	Separate motor cooling (fan top, N-end) and 2048 pulse tacho (Leine & Linde 861) mounted.	-	-	-	-	-	-	-	-	-	-	-	●	●	●	●	●
570	Prepared for hollow shaft pulse tacho (L&L 503).	-	●	●	●	●	●	-	-	-	-	-	-	-	-	-	-
572	1024 pulse tacho (L&L 503).	-	●	●	●	●	●	-	-	-	-	-	-	-	-	-	-
573	2048 pulse tacho (L&L 503).	-	●	●	●	●	●	-	-	-	-	-	-	-	-	-	-
582	1024 pulse tacho, GHK912-GBR-1024, BEI IDEACOD	-	-	-	-	-	-	-	-	-	-	-	●	●	●	●	●
583	2048 pulse tacho, GHK912-GBR-2048, BEI IDEACOD	-	-	-	-	-	-	-	-	-	-	-	●	●	●	●	●
588	Shaft grounding device	-	-	-	-	-	●	●	●	●	●	●	-	-	-	-	-
658	Special tacho mounted, price category 1	-	-	-	-	-	-	●	●	●	●	●	●	●	●	●	●
659	Special tacho mounted, price category 2	-	-	-	-	-	-	●	●	●	●	●	●	●	●	●	●
660	Special tacho mounted, price category 3	-	-	-	-	-	-	●	●	●	●	●	●	●	●	●	●
680	2048 pulse tacho, Ex d, tD, L&L 841910001	-	-	-	-	-	-	●	●	●	●	●	-	-	-	-	-
701	Insulated bearing at N-end.	-	-	-	-	-	-	●	●	●	●	●	●	●	●	●	●
702	Insulated bearings at both ends	●	●	●	●	●	●	●	●	●	●	●	-	-	-	-	-
704	EMC cable entry.	●	●	●	●	●	●	●	●	●	●	●	●	●	●	●	●

○ = Included as standard | ● = Available as option | - = Not applicable

		Frame size															
Code/Variants		**71**	**80**	**90**	**100**	**112**	**132**	**160**	**180**	**200**	**225**	**250**	**280**	**315**	**355**	**400**	**450**
Y/D starting																	
117	Terminals for Y/D start at both speeds (two speed windings).	-	-	-	-	-	-	●	●	●	●	●	●	●	-	-	-
118	Terminals for Y/D start at high speed (two speed windings).	-	-	-	-	-	-	-	-	-	-	-	●	●	-	-	-
119	Terminals for Y/D start at low speed (two speed windings).	-	-	-	-	-	-	-	-	-	-	-	●	●	-	-	-

○ = Included as standard | ● = Available as option | - = Not applicable

Mechanical design
Motor frame and drain holes

—
01 As standard, motor sizes 71 - 450 are delivered with drain holes and closable plugs.

Motor frame
The motor frame is made of cast iron, and the standard design includes cast iron feet, bearing housing, and terminal box. Integrated cast iron feet provide rigid mounting and minimize vibration.

Motors can be supplied for foot mounting, flange mounting,and combinations of these.

Drain holes
Motors that will be operated in very humid or wet environments, and especially under intermittent duty, should be provided with drain holes. The IM designation, such as IM 3031, determines the intended mounting arrangement for the motor.

Motor sizes 71 - 450 are fitted with drain holes and closable plugs. The plugs are open on delivery. When mounting the motors, ensure that the drain holes face downwards.

In the case of vertical mounting, the upper plug must be hammered home completely. In very dusty environments, both plugs should be hammered home.

When mounting arrangement differs from foot mounted IM B3, mention variant code 066 when ordering.

See variant codes 065 and 066 under the heading “Drain holes”.

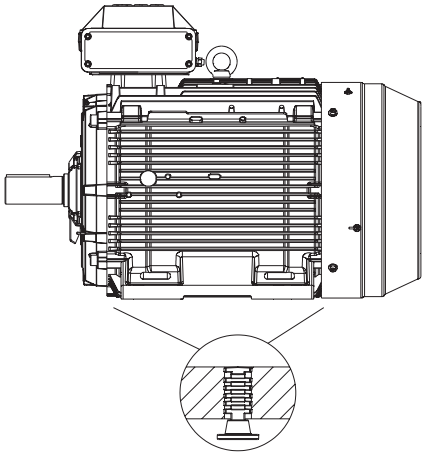

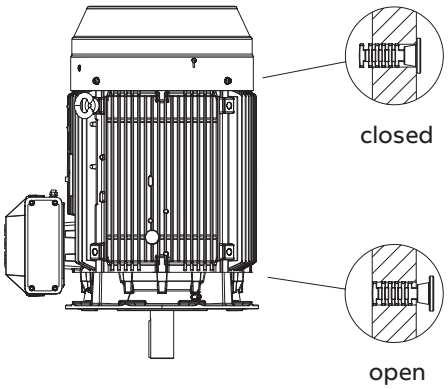

—
01

Mechanical design
Heating elements

Heating elements are installed into windings to keep them free of corrosion in humid conditions. The required power of heating elements is shown in the table. You can order heating elements with variant code 450 or 451.

Motor size	**71**	**80**	**90**	**100**	**112**	**132**	**160**	**180**
Power (W)	8	8	25	25	25	25	25	50

Motor size	**200**	**225**	**250**	**280**	**315**	**355**	**400**	**450**
Power (W)	50	50	50	60	2x60	2x60	2x60	2x100

Mechanical design
Bearings

Process performance motors are normally fitted with single-row deep-groove ball bearings, as shown in the table below.

If the bearing at the D-end is replaced with a roller bearing (NU- or NJ-), higher radial forces can be handled. Roller bearings are suitable for belt-drive applications and can be ordered with variant code 037.

When high axial forces are involved, angular-contact ball bearings should be used. When ordering a motor with an angular-contact ball bearing, specify also the method of mounting and the direction and magnitude of axial force. The variant codes for ordering angular-contact ball bearings are 058 and 059.

Standard and alternative designs

		Standard design		Alternative designs		
		Deep groove ball bearings		Roller bearings (037)	Ang. contact ball bearings (058, 059)	
Motor size	Number of poles	D-end	N-end	D-end	D-end	N-end
71	2 - 8	6203-2Z/C3	6202-2Z/C3	NU 203 ECP/C3	7203 B	7202 B
80	2 - 8	6204-2Z/C3	6203-2Z/C3	NU 204 ECP/C3	7204 B	7203 B
90	2 - 8	6205-2Z/C3	6204-2Z/C3	NU 205 ECP/C3	7205 B	7204 B
100	2 - 8	6206-2Z/C3	6205-2Z/C3	NU 206 ECP/C3	7206 B	7205 B
112	2 - 8	6206-2Z/C3	6205-2Z/C3	NU 206 ECP/C3	7206 B	7205 B
132	2 - 8	6208-2Z/C3	6208-2Z/C3	NU 208 ECP/C3	7208 B	7208 B
160	2 - 12	6309/C3	6209/C3	NU 309 ECP/C3	7309 B	7209 B
180	2 - 12	6310/C3	6209/C3	NU 310 ECP/C3	7310 B	7209 B
200	2 - 12	6312/C3	6210/C3	NU 312 ECP/C3	7312 B	7210 B
225	2 - 12	6313/C3	6212/C3	NU 313 ECP/C3	7313 B	7212 B
250	2 - 12	6315/C3	6213/C3	NU 315 ECP/C3	7315 B	7213 B
280	2	6316/C3	6316/C3	[1]	7316 B	7616 B
	4 - 12	6316/C3	6316/C3	NU 316 ECP/C3	7316 B	7316 B
315	2	6316/C3	6316/C3	[1]	7316 B	7316 B
	4 - 12	6319/C3	6316/C3	NU 319 ECP/C3	7319 B	7316 B
355	2	6316M/C3	6316M/C3	[1]	7316 B	7316 B
	4 - 12	6322/C3	6316/C3	NU 322 ECP/C3	7322 B	7316 B
400	2	6317M/C3	6317M/C3	[1]	7317 B	7317 B
	4 - 12	6324/C3	6319/C3	NU 324 ECP/C3	7324 B	7319 B
450	2	6317M/C3	6317M/C3	[1]	7317 B	7317 B
	4 - 12	6326M/C3	6322/C3	NU 326 ECP/C3	7326 B	7322 B

[1] On request

—
01 Motor sizes 71 - 132.

02 Motor sizes 160 - 250.

03 Motor sizes 280 - 450 Labyrinth seal.

04 V-ring.

05 Radial seal.

Axially-locked bearings
All motors are equipped as standard with an axially locked bearing at the D-end.

Transport locking
Motors with roller bearings or an angular-contact ball bearing are fitted with a transport lock before dispatch to prevent damage to bearings during transport. A warning sign is attached to motors larger than 250 when transport locking is used.

Locking may also be fitted in other cases if severe transport conditions are expected.

Bearing seals
These tables present the standard and alternative sizes and types of bearing seals per motor size.

Bearing seals

		Standard design		Alternative design
		Axial seal		Radial seal at D-end (DIN 3760)
Motor size	Number of poles	D-end	N-end	Variant code 072
71	2 - 12	VA16	Labyrinth seal	17x28x7
80	2 - 12	VA20	Labyrinth seal	20x40x7
90	2 - 12	VA25	Labyrinth seal	25x42x7
100	2 - 12	VA30	Labyrinth seal	30x47x7
112	2 - 12	VA30	Labyrinth seal	30x47x7
132	2 - 12	VA40	VA40	40x62x7
160	2 - 12	RB45	RB45	45x62x8
180	2 - 12	RB50	RB45	50x68x8
200	2 - 12	RB60	RB50	60x80x8
225	2 - 12	RB65	RB60	65x85x10
250	2 - 12	RB75	RB65	75x95x10

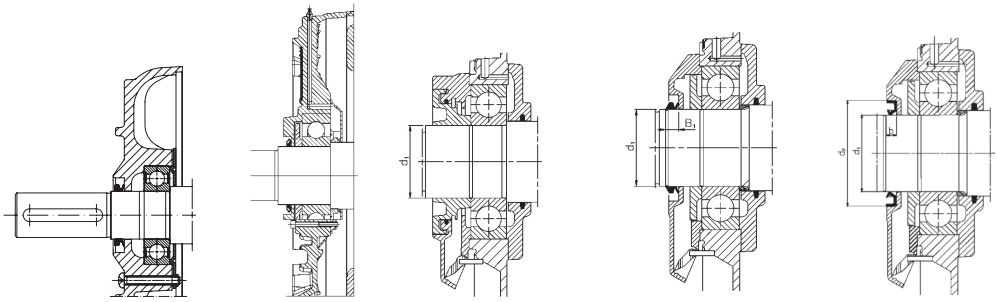

— 01 — 02 — 03 — 04 — 05

Bearing seals

		Standard design		Alternative design	
Motor size	Number of poles	D-end	N-end	D-end	N-end
		D-end	N-end	D-end	N-end
280	2	Labyrinth seal	VS80	-	Labyrinth seal
280	4 - 12	VS80	VS80	Labyrinth seal	Labyrinth seal
	4 - 12			Radial seal 80x110x10	Radial seal 80x110x10
315	2	Labyrinth seal	VS80	-	Labyrinth seal
315 SM, ML	4 - 12	VS95	VS80	Labyrinth seal	Labyrinth seal
	4 - 12			Radial seal 95x125x10	Radial seal 80x110x10
315 LK	4 - 12	Labyrinth seal	VS80	-	Labyrinth seal
	4 - 12			-	Radial seal 80x110x10
355	2	Labyrinth seal	VS80	-	Labyrinth seal
355	4 - 12	Labyrinth seal	VS80	-	Labyrinth seal
400	2	Labyrinth seal	Labyrinth seal	-	-
400	4 - 12	Labyrinth seal	VS95	-	Labyrinth seal
450	2	Labyrinth seal	Labyrinth seal	-	-
450	4 - 12	Labyrinth seal	Labyrinth seal	-	-

Table is valid for IE2 motors
Axial seal:
RB45...75 = Gamma-ring
VA16…65 = V-ring, type A
VS80…95 = V-ring, type S

Bearing life and lubrication

Bearing life

The nominal life L_{10h} of a bearing is defined according to ISO 281 as the number of operating hours achieved or exceeded by 90 % of identical bearings in a large test series under specified conditions. 50 % of bearings achieve at least five times this lifetime.

The calculated bearing life L_{10h} for power transmission by means of coupling is for horizontally mounted motors in sizes 280 to 315 ≥ 200,000 hours.

Lubrication

On delivery, motors in frame size 160 and above are prelubricated with high-quality grease. Before first start-up, see instructions for relubricaton and recommended grease in the Manual for low voltage motors delivered together with the motor, or see the lubrication plate on the motor.

Motors with bearings greased for life

Motors in frame sizes 71 - 132 are equipped with bearings greased for life, while this is available as an option for frame sizes 160 - 250. Bearings are lubricated with high-quality, high-temperature grease. Bearing types are stated on the rating plate.

The approximate lifetime of bearings in four-pole motors is about 40 0000 duty hours. Lifetime is subject to the load conditions of the application run by the motor.

Lubrication intervals

ABB follows the L_1 principle in defining lubrication intervals. This means that 99 % of motors will make the interval time.

The lubrication intervals can also be calculated according to the L_{10} principle, which usually gives twice as long interval times. L_{10} values are available from ABB at request.

Motors with relubrication nipples

In frame sizes 280 - 450, the bearing system allows the use of a valve disc to ease lubrication. Motors are lubricated while running.

The grease outlet opening has closing valves at both ends. These should be opened before greasing and closed 1 - 2 hours after regreasing. This ensures that the construction is tight and bearings remain dust- and dirt-free.

A grease-collection method can be used optionally.

The following tables show lubrication intervals according to the L_1 principle for various nominal speeds in 25 °C ambient temperature. These values apply to horizontally mounted motors (B3) with 80 °C bearing temperature and high-quality grease containing lithium-complex soap and mineral or PAO-oil.

Lubrication intervals in duty hours for ball bearings

Frame size	Amount of grease g/bear-ing	Amount of grease g/N-end	Output kW	Speed 3600 r/min	Speed 3000 r/min	Output kW	Speed 1800 r/min	Speed 1500 r/min	Output kW	Speed 1000 r/min	Output kW	Speed 500-900 r/min
Ball bearings												
Lubrication intervals in duty hours												
160	13	13	≤ 18.5	9000	12 000	≤ 15	18 000	21 500	≤ 11	24 000	all	24 000
160	13	13	> 18.5	7500	10 000	> 15	15 000	18 000	> 11	22 500	all	24 000
180	15	15	≤ 22	7000	9000	≤ 22	15 500	18 500	≤ 15	24 000	all	24 000
180	15	15	> 22	6000	8500	> 22	14 000	17 000	> 15	21 000	all	24 000
200	20	15	≤ 37	5500	8000	≤ 30	14 500	17 500	≤ 22	23 000	all	24 000
200	20	15	> 37	3000	5500	> 30	10 000	12 000	> 22	16 000	all	20 000
225	23	20	≤ 45	4000	6500	≤ 45	13 000	16 500	≤ 30	22 000	all	24 000
250	23	20	> 45	1500	2500	> 45	5000	6000	> 30	8000	all	10 000
250	30	23	≤ 55	2500	4000	≤ 55	9000	11 500	≤ 37	15 000	all	18 000
250	30	23	> 55	1000	1500	> 55	3500	4500	> 37	6000	all	7000
280	35	35	all	1900	3200		-	-		-		-
280	40	40		-	-	all	7800	9600	all	13 900	all	15 000
315	35	35	all	1900	3200		-	-		-		-
315	55	40		-	-	all	5900	7600	all	11 800	all	12 900
355	35	35	all	1900	3200		-	-		-		-
355	70	40		-	-	all	4000	5600	all	9600	all	10 700
400	40	40	all	1500	2700		-			-	-	-
400	85	55		-	-	all	3200	4700	all	8600	all	9700
450	40	40	all	1500	2700		-	-		-		-
450	95	70		-	-	all	2500	3900	all	7700	all	8700

Lubrication intervals in duty hours for roller bearings

Frame size	Amount of grease g/bear-ing	Amount of grease g/N-end	Output kW	Speed 3600 r/min	Speed 3000 r/min	Output kW	Speed 1800 r/min	Speed 1500 r/min	Output kW	Speed 1000 r/min	Output kW	Speed 500-900 r/min
Roller bearings												
Lubrication intervals in duty hours												
160	13	13	≤ 18.5	4500	6000	≤ 15	9000	10 500	≤ 11	12 000	all	12 000
160	13	13	> 18.5	3500	5000	> 15	7500	9000	> 11	11 000	all	12 000
180	15	15	≤ 22	3500	4500	≤ 22	7500	9000	≤ 15	12 000	all	12 000
180	15	15	> 22	3000	4000	> 22	7000	8500	> 15	10500	all	12 000
200	20	15	≤ 37	2750	4000	≤ 30	7000	8500	≤ 22	11 500	all	12 000
200	20	15	> 37	1500	2500	> 30	5000	6000	> 22	8000	all	10 000
225	23	20	≤ 45	2000	3000	≤ 45	6500	8000	≤ 30	11 000	all	12 000
225	23	20	> 45	750	1250	> 45	2500	3000	> 30	4000	all	5000
250	30	23	≤ 55	1000	2000	≤ 55	4500	5500	≤ 37	7500	all	9000
250	30	23	> 55	500	750	> 55	1500	2000	> 37	3000	all	3500
280	35	35	all	900	1600		-	-		-		-
280	40	40		-	-	all	4000	5300	all	7000	all	8500
315	35	35	all	900	1600		-	-		-		-
315	55	40		-	-	all	2900	3800	all	5900	all	6500
355	35	35	all	900	1600		-	-		-		-
355	70	40		-	-	all	2000	2800	all	4800	all	5400
400	40	40	all	-	1300		-	-		-		-
400	85	55		-	-	all	1600	2400	all	4300	all	4800
450	40	40	all	-	1300		-	-		-		-
450	95	70		-	-	all	1300	2000	all	3800	all	4400

Mechanical design
Radial forces

Permissible loading on the shaft
The following table shows permissible radial forces on the shaft in Newtons, assuming zero axial force, a 25 °C ambient temperature, and normal conditions. The values are given for a calculated bearing life of 20 000 and 40 000 hours per motor size.

These calculated values further assume mounting position IM B3 (foot-mounted), with force directed sideways. In some cases, the strength of the shaft affects permissible forces.

Permissible loads of simultaneous radial and axial forces can be supplied on request.

If the radial force is applied between points X0 and Xmax, the permissible force FR can be calculated with the following formula:

$$F_R = F_{X0} - \frac{X}{E}(F_{X0} - F_{Xmax})$$

Where:	
E:	length of the shaft extension in the standard version

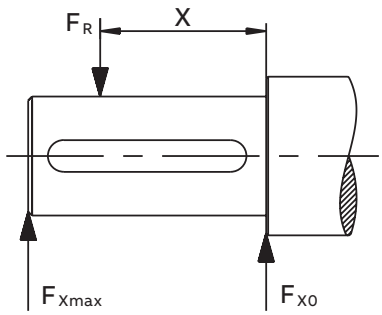

Permissible radial forces

			Basic design with deep groove ball bearings				Roller bearings			
		Length of shaft extension	Mounting arrangement IM B3				Mounting arrangement IM B3			
			20,000 h		40,000 h		20,000 h		40,000 h	
Motor size	Poles	E (mm)	F_{X0}(N)	F_{Xmax}(N)	F_{X0}(N)	F_{Xmax}(N)	F_{X0}(N)	F_{Xmax}(N)	F_{X0}(N)	F_{Xmax}(N)
71	2	30	540	460	420	360	1285	650	1040	650
	4	30	700	605	555	480	1615	650	1310	650
	6	30	780	665	620	530	1640	650	1450	650
	8	30	860	730	685	580	1640	600	1580	600
80	2	40	710	600	385	350	1910	865	1555	865
	4	40	940	810	725	625	2335	865	1945	865
	6	40	1060	895	840	710	2335	865	2160	865
	8	40	1185	1020	940	810	2335	865	2335	865
90	2	50	820	690	650	545	2205	1330	1790	1330
	4	50	1035	870	820	690	2715	1330	2205	1330
	6	50	1185	995	940	790	3065	1330	2490	1330
	8	50	1300	1095	1035	870	3340	1330	2715	1330
100	2	60	1130	925	900	735	2905	1900	2360	1900
	4	60	1425	1165	1135	925	3575	1900	2905	1900
	6	60	1635	1335	1295	1060	4040	1900	3280	1900
	8	60	1820	1520	1445	1205	4460	1900	3620	1900
112	2	60	1170	980	925	775	3000	1970	2435	1970
	4	60	1475	1235	1170	980	3695	1970	3000	1970
	6	60	1690	1310	1340	1120	4170	1970	3390	1970
	8	60	1860	1310	1475	1235	4550	1970	3695	1970
132	2	80	1840	1500	1460	1190	4255	3465	3455	2815
	4	80	2320	1890	1840	1500	5240	4265	4255	3465
	6	80	2660	2165	2110	1715	5915	3680	4805	3680
	8	80	2925	2380	2320	1890	6450	3680	5240	3680

Permissible radial forces

Motor size	Poles	Length of shaft extension E (mm)	Ball bearings				Roller bearings			
			20,000 h		40,000 h		20,000 h		40,000 h	
			F_{x0}(N)	F_{Xmax}(N)	F_{x0}(N)	F_{Xmax}(N)	F_{x0}(N)	F_{Xmax}(N)	F_{x0}(N)	F_{Xmax}(N)
160 MLA	2	110	3540	2740	2955	2285	7100	4300	6140	4300
	4	110	4000	3100	3325	2570	8000	4300	6870	4300
	6	110	4170	3200	3440	2655	8600	4300	7270	4300
	8	110	4600	3585	3855	2985	9300	4300	7955	4300
160 MLB	2	110	3540	2740	2955	2270	7085	4300	6070	4300
	4	110	4085	3300	3370	2725	8300	4300	7055	4300
	6	110	4100	3355	3400	2755	8600	4300	7300	4300
	8	110	4200	3270	3455	2670	9000	4300	7570	4300
160 MLC	2	110	3400	2600	2855	2200	6800	4300	5885	4300
	4	110	3700	3000	3070	2485	7800	4300	6640	4300
	6	110	3600	2900	2870	2325	8000	4300	6700	4300
	8	110	4170	3370	3370	2725	9000	4300	7585	4300
160 MLD	2	110	3585	2900	3000	2440	7100	4300	6140	4300
	4	110	3400	2755	2755	2240	7600	4300	6370	4300
160 MLE	2	110	3185	2570	2640	2140	6785	4300	5770	4300
180 MLA	2	110	4100	3385	3455	2825	8125	5500	7025	5500
	4	110	4270	3485	3525	2885	8600	5500	7300	5500
	6	110	4700	3800	3855	3155	9400	5500	7900	5500
	8	110	4785	3900	3870	3170	9800	5500	8255	5500
180 MLB	2	110	4170	3400	3470	2825	7900	5500	6770	5500
	4	110	4185	3400	3440	2810	8500	5500	7200	5500
	6	110	4370	3570	3525	2885	9000	5500	7600	5500
180 MLC	4	110	3700	3055	3010	2470	7900	5500	6655	5440
200 MLA	2	110	5600	4685	4700	3925	10900	9100	9470	7900
	4	110	6285	5200	5240	4370	12500	9550	10700	8900
	6	110	6800	5700	5700	4770	13600	9550	11670	9550
	8	110	6800	5700	5600	4685	14100	9550	12000	9550
200 MLB	2	110	5670	4700	4700	3925	11000	9200	9500	7900
	4	110	5700	4700	4700	3925	12000	9550	10185	8500
	6	110	6400	5370	5300	4425	13200	9550	11200	9385
200 MLC	2	110	5000	4185	4185	3500	10400	8700	8900	7455
	4	110	5400	4500	4425	3685	11600	9550	9800	8200
	6	110	5800	4885	4740	3955	12500	9550	10600	8800
200 MLD	2	110	4985	4170	4170	3485	10400	8700	8900	7400
225 SMA	2	110	6400	5400	5355	4500	13300	10700	11500	9700
	4	140	7300	5900	6155	4970	15400	10250	13200	10250
	6	140	7600	6200	6370	5140	16400	10250	14000	10250
	8	140	8500	6900	7100	5725	17900	10250	15300	10250
225 SMB	2	110	6100	5185	5155	4340	13000	10700	11200	9455
	4	140	7085	5700	5885	4755	15100	10250	12900	10250
	6	140	7100	5700	5840	4700	16000	10250	13500	10250
	8	140	8000	6485	6600	5340	17300	10250	14700	10250
225 SMC	2	110	5600	4700	4685	3940	12600	10600	10770	9070
	4	140	6400	5200	5300	4285	14500	10250	12385	10000
225 SMD	2	110	5500	4640	4600	3880	12420	10460	10640	8960
	4	140	5800	4700	4725	3800	13500	10250	11400	9270
250 SMA	2	140	7700	6285	6500	5285	17100	10900	14900	10900
	4	140	8700	7000	7300	5900	19800	13800	17000	13785
	6	140	9400	7600	7800	6355	21600	13800	18400	13800
	8	140	9600	7800	7900	6400	22700	13800	19300	13800
250 SMB	2	140	7100	5800	6000	4885	16700	10900	14400	10900
	4	140	7800	6300	6470	5240	18900	13800	16200	13100
	6	140	8900	7200	7355	5955	21200	13800	18000	13800
250 SMC	2	140	6800	5500	5670	4600	16300	10900	14000	10900
	4	140	7400	6000	6055	4900	18100	13800	15400	12485
	6	140	8200	6600	6670	5400	20300	13800	17200	13800

Permissible radial forces

Motor size	Poles	Length of shaft extension E (mm)	Ball bearings				Roller bearings			
			20,000 h		40,000 h		20,000 h		40,000 h	
			F_{x0}(N)	F_{Xmax}(N)	F_{x0}(N)	F_{Xmax}(N)	F_{x0}(N)	F_{Xmax}(N)	F_{x0}(N)	F_{Xmax}(N)
280 SM_	2	140	7300	6000	5800	4900	20400	6000	16500	6000
	4	140	9200	7800	7300	6200	25100	9200	20300	9200
	6	140	10600	8900	8400	7000	28300	9200	23000	9200
	8	140	11700	9200	9200	7800	30900	9200	25100	9200
280 ML_	2	140	7400	6200	5800	5000	20600	6200	16700	6200
	4	140	9200	7900	7300	6200	25000	9500	20300	9500
	6	140	10500	9000	8300	7100	28300	9400	22900	9400
	8	140	11600	9500	9200	7900	30800	9500	25000	9500
315 SM_	2	140	7300	6000	5800	4950	20300	6000	16500	6000
	4	170	11400	9400	9000	7450	32500	9600	26600	9600
	6	170	13000	9600	10300	8500	37000	9600	30000	9600
	8	170	14400	9600	11400	9400	40300	9600	32700	9600
315 ML_	2	140	7400	6400	5850	5050	20600	5850	16700	5850
	4	170	11500	9700	9100	7650	32700	13600	26500	13600
	6	170	13200	11100	10400	8800	36900	13600	29900	13600
	8	170	14500	12200	11500	9700	40200	13600	32600	13600
315 LK_	2	140	7400	6550	5800	5150	20800	5550	16800	5550
	4	170	11500	10000	9100	7850	33100	13350	26800	13350
	6	170	13200	11400	10450	9050	37300	13350	30300	13350
	8	170	14600	12600	11550	10000	40800	13350	33100	13350
355 SM_	2	140	7350	6450	5750	5050	20600	7200	16700	7200
	4	210	15200	12600	12000	9950	45500	14000	36900	14000
	6	210	17500	14000	13800	11400	51400	14000	41700	14000
	8	210	19300	14000	15250	12600	56000	14000	45500	14000
355 ML_	2	140	7350	6550	5750	5100	20800	6750	16800	6750
	4	210	15300	12900	12000	10100	45900	13600	37200	13600
	6	210	17600	13600	13900	11600	51500	13600	42100	13600
	8	210	19400	13600	15300	12900	56000	13600	45900	13600
355 LK_	2	140	7350	6650	5650	5100	21000	6550	17000	6550
	4	210	15200	13000	11850	10200	46000	13000	37300	13000
	6	210	17500	13000	13700	11900	52000	13000	42000	13000
	8	210	19400	13000	15200	13000	56500	13000	46000	13000
400 L_	2	170	7650	6850	4400	3900	23900	9050	19350	9050
	4	210	15600	13550	12150	10550	52500	16000	43300	16000
	6	210	17800	15450	13850	12000	60000	16000	48800	16000
	8	210	19700	16000	15350	13350	65700	16000	53200	16000
400 LK_	2	170	7650	6850	4400	3900	23900	9050	19350	9050
	4	210	15600	11500	12150	10550	52500	11500	43300	11500
	6	210	17800	11500	13850	11500	60000	11500	48800	11500
	8	210	19700	11500	15350	11500	65700	11500	53200	11500
450 L_	2	170	7400	6700	3500	3300	24000	7500	19000	7500
	4	210	17000	15200	13000	11600	62000	25000	50000	25000
	6	210	19000	17000	14000	13000	70000	24000	56000	24000
	8	210	21300	19000	16500	14600	76000	23000	62000	23000

Mechanical design
Axial forces

—
01 Mounting arrangement IM B3.

02 Mounting arrangement IM V1.

The following tables present permissible axial forces on the shaft in Newtons, assuming zero radial force, a 25 °C ambient temperature, and normal conditions. The values are given for a calculated bearing life of 20,000 and 40,000 hours per motor size.

At 60 Hz, the values must be reduced by 10 percent, and for two-speed motors, the higher speed determines permissible axial force. Permissible loads of simultaneous radial and axial forces can be supplied on request.

For axial force F_{AD}, it is assumed that the D-bearing is locked with a locking ring.

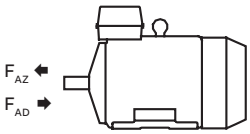

—
01

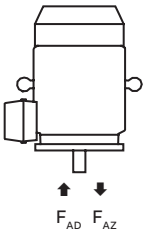

—
02

Permissible axial forces

Motor size	Poles	Length of shaft extension E (mm)	Mounting arrangement IM B3				Mounting arrangement IM V1			
			Deep groove ball bearings				Deep groove ball bearings			
			20,000 h		40,000 h		20,000 h		40,000 h	
			F_{AD}(N)	F_{AZ}(N)	F_{AD}(N)	F_{AZ}(N)	F_{AD}(N)	F_{AZ}(N)	F_{AD}(N)	F_{AZ}(N)
71	2	30	615	285	505	175	630	275	520	165
	4	30	760	430	615	285	790	410	645	265
	6	30	870	540	695	365	890	525	720	355
	8	30	960	630	765	435	985	615	785	415
80	2	40	880	300	735	155	915	280	770	135
	4	40	1075	495	880	300	1130	455	935	260
	6	40	1215	635	985	405	1270	600	1040	370
	8	40	1330	750	1070	490	1400	705	1140	450
90	2	50	780	500	620	340	840	455	680	300
	4	50	985	705	775	495	1070	650	860	440
	6	50	1140	860	890	610	1225	800	975	555
	8	50	1265	985	985	705	1355	925	1075	645
100	2	60	925	570	735	350	1285	510	1060	290
	4	60	1480	860	1190	570	1600	780	1305	490
	6	60	1690	1070	1350	730	1815	995	1470	650
	8	60	1865	1245	1480	860	1995	1160	1610	775

Permissible axial forces

Motor size	Poles	Length of shaft extension E (mm)	Mounting arrangement IM B3				Mounting arrangement IM V1			
			Deep groove ball bearings				Deep groove ball bearings			
			20,000 h		40,000 h		20,000 h		40,000 h	
			F_{AD}(N)	F_{AZ}(N)	F_{AD}(N)	F_{AZ}(N)	F_{AD}(N)	F_{AZ}(N)	F_{AD}(N)	F_{AZ}(N)
112	2	60	1155	595	935	375	1290	505	1070	280
	4	60	1445	885	1155	595	1595	785	1300	495
	6	60	1655	1095	1315	755	1810	995	1465	650
	8	60	1830	1270	1445	885	1985	1170	1600	780
132	2	80	1765	965	1420	620	1925	855	1580	510
	4	80	2210	1410	1755	955	2420	1270	1965	815
	6	80	2535	1735	2000	1200	2770	1580	2235	1045
	8	80	2800	2000	2205	1405	3055	1835	2455	1235
160 MLA	2	110	2850	2850	2325	2325	3100	2578	2570	2048
	4	110	3450	3450	2775	2775	3820	3150	3120	2450
	6	110	3690	3690	2970	2970	4100	3410	3325	2635
	8	110	4155	4155	3315	3315	4440	3845	3640	3045
160 MLB	2	110	2850	2850	2325	2325	3120	2570	2580	2030
	4	110	3435	3435	2760	2760	3880	3085	3180	2385
	6	110	3600	3600	2880	2880	4120	3240	3360	2480
	8	110	3750	3750	2970	2970	4140	3450	3340	2650
160 MLC	2	110	2775	2775	2280	2280	3080	2500	2560	1980
	4	110	3150	3150	2535	2535	3620	2770	2985	2135
	6	110	3135	3135	2490	2490	3680	2700	3005	2025
	8	110	3675	3675	2910	2910	4240	3260	3445	2465
160 MLD	2	110	2865	2865	2330	2330	3220	2540	2665	1985
	4	110	2900	2900	2320	2320	3420	2470	2820	1870
160 MLE	2	110	2500	2500	2025	2025	2900	2150	2420	1670
180 MLA	2	110	3300	3300	2700	2700	3660	2940	3060	2340
	4	110	3600	3600	2920	2920	4160	3150	3460	2450
	6	110	4140	4140	3320	3320	4800	3675	3940	2815
	8	110	4220	4220	3360	3360	4960	3740	4040	2820
180 MLB	2	110	3340	3340	2725	2725	3760	2960	3125	2320
	4	110	3580	3580	2900	2900	4220	3095	3500	2375
	6	110	3800	3800	3040	3040	4500	3285	3700	2485
180 MLC	4	110	3220	3220	2560	2560	3880	2660	3220	2000
200 MLA	2	110	4460	4460	3640	3640	5000	3965	4200	3125
	4	110	5000	5260	4260	4260	5000	4680	5000	3640
	6	110	5000	5480	4720	4720	5000	5265	5000	4065
	8	110	5000	5880	4700	4700	5000	5195	5000	3955
200 MLB	2	110	4440	4440	3620	3620	5000	3905	4220	3085
	4	110	4720	4720	3840	3840	5000	4060	4700	3120
	6	110	5000	5480	4420	4420	5000	4800	5000	3660
200 MLC	2	110	3940	3940	3180	3180	4600	3385	3880	2665
	4	110	4480	4480	3620	3620	5000	3775	4520	2875
	6	110	4980	4980	3980	3980	5000	4165	5000	3105
200 MLD	2	110	3940	3940	3200	3200	4660	3370	3925	2635

Permissible axial forces

Motor size	Poles	Length of shaft extension E (mm)	Mounting arrangement IM B3				Mounting arrangement IM V1			
			Deep groove ball bearings				Deep groove ball bearings			
			20,000 h		40,000 h		20,000 h		40,000 h	
			F_{AD}(N)	F_{AZ}(N)	F_{AD}(N)	F_{AZ}(N)	F_{AD}(N)	F_{AZ}(N)	F_{AD}(N)	F_{AZ}(N)
225 SMA	2	110	4980	4980	4060	4060	5000	4375	4780	3455
	4	140	5000	6080	4920	4920	5000	5445	5000	4225
	6	140	5000	6520	5000	5260	5000	5735	5000	4395
	8	140	5000	7420	5000	5960	5000	6535	5000	5095
225 SMB	2	110	4860	4860	3960	3960	5000	4245	4780	3345
	4	140	5000	5880	4780	4780	5000	5175	5000	3995
	6	140	5000	6020	4840	4840	5000	5155	5000	3915
	8	140	5000	6940	5000	5560	5000	6055	5000	4635
225 SMC	2	110	4380	4380	3540	3540	5000	3670	4440	2900
	4	140	5000	5240	4260	4260	5000	4445	5000	3425
225 SMD	2	110	4320	4320	3480	3480	5000	3590	4400	2790
	4	140	4800	4800	3820	3820	5000	3895	5000	2935
250 SMA	2	140	6000	6080	4920	4920	6000	5345	5840	4225
	4	140	6000	7140	5820	5820	6000	6300	6000	4920
	6	140	6000	7880	6000	6380	6000	6950	6000	5350
	8	140	6000	8200	6000	6600	6000	7125	6000	5385
250 SMB	2	140	5620	5620	4540	4540	6000	4830	5640	3810
	4	140	6000	6320	5100	5100	6000	5325	6000	4085
	6	140	6000	7480	6000	6040	6000	6370	6000	4830
250 SMC	2	140	5260	5260	4220	4220	6000	4395	5400	3415
	4	140	5960	5960	4760	4760	6000	4900	6000	3700
	6	140	6000	6860	5520	5520	6000	5575	6000	4135
280 SM_	2	140	6200	4250	4900	2900	7550	3150	6200	1800
	4	140	8000	6000	6250	4250	9600	4550	7800	2750
	6	140	7250	9250	7150	5150	11150	5500	9000	3350
	8	140	10300	8300	7950	5950	12200	7000	9850	4700
280 ML_	2	140	6100	4100	4800	2800	8150	2750	6800	1400
	4	140	7800	5800	6000	4000	10450	4050	8650	2250
	6	140	8950	6950	6900	4900	12350	4750	10250	2600
	8	140	10000	8000	7700	5700	13450	5800	11050	3450
315 SM_	2	140	6180	4200	4850	2850	7950	2600	6600	1300
	4	170	9400	7400	7250	5250	11750	5500	9550	3300
	6	170	10900	8900	8350	6350	13600	6300	11050	3750
	8	170	12000	10000	9200	7000	15350	7900	12450	5000
315 ML_	2	140	6050	4050	4750	2750	8650	2300	7300	[1]
	4	170	9250	7250	7100	5100	12500	5050	10300	2900
	6	170	10650	8650	8100	6100	14900	5800	12350	3250
	8	170	11500	9900	8900	6800	15400	6300	13600	3400
315 LK_	2	140	6000	3950	4650	2650	9100	1350	7750	[1]
	4	170	9100	7150	7000	5000	13100	3850	10900	1700
	6	170	10500	8500	7950	5950	15700	4100	13100	1550
	8	170	11750	9750	8900	6900	16900	6300	14100	3450

Permissible axial forces

Motor size	Poles	Length of shaft extension E (mm)	Mounting arrangement IM B3				Mounting arrangement IM V1			
			Deep groove ball bearings				Deep groove ball bearings			
			20,000 h		40,000 h		20,000 h		40,000 h	
			F_{AD}(N)	F_{AZ}(N)	F_{AD}(N)	F_{AZ}(N)	F_{AD}(N)	F_{AZ}(N)	F_{AD}(N)	F_{AZ}(N)
355 SM_	2	140	3050	6850	1750	5550	6350	4250	4950	2900
	4	210	8600	12400	5900	9700	13250	8600	10450	5850
	6	210	10550	14350	7300	11100	15650	9580	12350	6270
	8	210	12200	16000	8550	12350	17350	12500	13600	8900
355 ML_	2	140	2900	6700	1600	5400	7100	3700	5750	2350
	4	210	8360	12150	5650	9450	14600	7950	11850	5150
	6	210	10100	13900	6900	10700	18050	8600	14700	5300
	8	210	12000	15800	7300	11000	21100	11650	17000	7600
355 LK_	2	140	2650	6450	1350	5150	8250	2650	6900	1300
	4	210	8200	12000	5450	9250	15650	6600	12850	3800
	6	210	9900	13700	6700	10500	19100	7050	15800	3750
	8	210	11450	15250	7800	11600	21200	8700	17500	5000
400 L, LK_	2	170	2150	7150	[1]	5800	8650	2150	7220	[1]
	4	210	7100	13100	4300	10300	16050	6400	13150	3400
	6	210	8850	14850	5500	11500	18450	6750	15100	3400
	8	210	10450	16450	6750	12750	20100	8350	16450	4700
450 L_	2	170	1800	6800	[1]	5500	11500	[1]	10000	[1]
	4	210	7600	13500	4500	10500	20000	4400	17700	1200
	6	210	9000	15000	5600	11500	26000	3700	22200	[1]
	8	210	10800	16800	7000	12900	27800	5500	23700	1350

[1] On request.

Terminal box
Standard terminal box

Degree of protection and mounting options
The degree of protection for the standard terminal box is IP 55. By default, terminal boxes are mounted on top of the motor at D-end. In motor sizes 71 - 132, the terminal box is integrated in motor frame. On request, the terminal box can also be mounted on the left or right side regardless of motor size (see Mounting options).

Turnability
In frame sizes 71 to 132 the terminal box is integrated into the frame and can therefore not be turned. Please use the variant code 400 if there is a need to have 4*90° turnability.
The standard terminal boxes for motor sizes 160 to 355 can be turned 4*90°. On frame sizes 400-450 the terminal box can not be turned without turning the terminal board. In these frame sizes you need to specify the cable entry direction when ordering, by using the variant codes 022, 468 or 469.

Cable entries
The terminal box is provided with tapped holes for cable glands. No cable glands are included as standard, the entry holes are closed with blanking plugs made of plastic. Very large motors have angle adapters and cable sealing units as standard. Please refer to the table on the next page for further information about the amount and size of threaded holes, plugs and cable sealing units provided as standard.
Different types of cable glands are available as option. Please refer to the terminal box alternatives section for more details.

Cable type and terminations
If no cable type is specified in the order, it will be a PVC-insulated non-armored cable, and its termination parts are determined as shown in the following table.

Terminations are suitable for copper and aluminum cables (Al-cables on request for motor sizes 160 to 250). Cables are connected to terminals by cable lugs, which are not included in the delivery.

Ordering
To ensure the delivery of desired terminations for the motor, state the cable type, quantity, size, and outer diameter when ordering. Non-standard designs of terminal boxes, such as non-standard size or higher degree of protection, are available as options.

See section Variant codes for all options available.

Standard delivery

Standard delivery if no other information is provided. Note: For other network voltages and/ or side-mounted motors, contact your ABB sales office.

Motor size	Pole number	Terminal box type	Size of gland plate opening on terminal box	45° angle adapter	Amount and size of threaded plugged holes or cable end sealing unit	Cable outer diameter mm	Max. connect-able core cross-section mm²/phase	Number and size of termi-nal bolts
IE2, IE3, IE4 motors								
71	2-8	inte-grated	-	-	2xM16x1.5		1x2.5	6xM4
80	2-8	inte-grated	-	-	2xM25x1.5		1x4	6xM4
90	2-8	inte-grated	-	-	2xM25x1.5		1x6	6xM5
100 - 132	2-8	inte-grated	-	-	2xM32x1.5		1x10	6xM5
160 - 180	2-8	63	B	-	2xM40x1.5		1x35	6xM6
200 - 250	2-8	160	C	-	2xM63x1.5		1x70	6xM10
280 SM_	2-8	210	C	-	2xM63x1.5		2x150	6xM12
280 ML_	2-4	370	D	-	2xM63x1.5		2x240	6xM12
280 ML_	6-8	210	C	-	2xM63x1.5		2x150	6xM12
315 SM_, ML_	2-8	370	D	-	2xM63x1.5		2x240	6xM12
315 LKA, LKB	2-4	370	D	-	2xM63x1.5		2x240	6xM12
315 LKC	2-4	750	E	E-D	Medium	2xØ48-60	4x240	6xM12
315 LK_	6-8	370	D	-	2xM63x1.5		2x240	6xM12
355 SMA - SMC	2-4	750	E	E-D	Medium	2xØ48-60	4x240	6xM12
355 SMA, SMB	6-8	370	D	-	2xM63x1.5		2x240	6xM12
355 SMC	6	750	E	E-D	Medium	2xØ48-60	4x240	6xM12
355 SMC	8	370	D	-	2xM63x1.5		2x240	6xM12
355 MLA	2-4	750	E	E-D	Medium	2xØ48-60	4x240	6xM12
355 MLB, LK_	2-4	750	E	E-D	Large	2xØ60-80	4x240	6xM12
355 ML_, LK_	6-8	750	E	E-D	Medium	2xØ48-60	4x240	6xM12
400	2-6	750	E	E-D	Large	2xØ60-80	4x240	6xM12
400 LA, LB	8	750	E	E-D	Medium	2xØ48-60	4x240	6xM12
400 LC	8	750	E	E-D	Large	2xØ60-80	4x240	6xM12
450 LA	2	1200	E	E-2D	2 x Large	4xØ60-80	6x240	6xM12
450 LA	4	1200	E	E-D	Large	2xØ60-80	6x240	6xM12
450 LB, LC	2-4	1200	E	E-2D	2 x Large	4xØ60-80	6x240	6xM12
450 LA	6	750	E	E-D	Large	2xØ60-80	4x240	6xM12
450 LB, LC	6	1200	E	E-D	Large	2xØ60-80	6x240	6xM12
450	8	750	E	E-D	Large	2xØ60-80	4x240	6xM12

Auxiliary cable entries								
160 - 450	2-8				2xM20x1.5	Ø4-12		

Motor size	Earthing on frame	Earthing in main terminal box
71 - 112	M4	M4
132	M5	M5
160 - 250	clamp	M6
280 - 400	M10	2xM10
450	M10	4xM12

Terminal box

Terminal box dimensions

—
01 Terminal box type 63 and 160.

02 Terminal box types 210 and 370.

03 Terminal box type 750 + adapter.

04 Terminal box type 1200 + adapter.

For motor sizes 71 to 132 the terminal box is integrated in motor frame and the dimensions for terminal boxes can be found in the motor dimension drawings in ABB Library.
To match the correct terminal box with motor sizes 160 - 450, find the motor type and correspondent terminal box type on the previous page. The box types and heir dimensions are presented on this page.

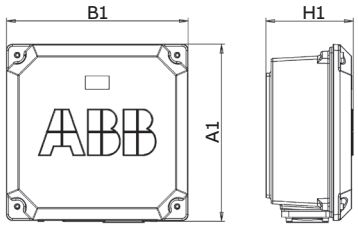

—
01

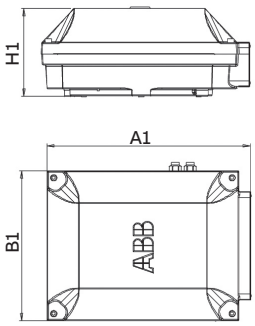

—
02

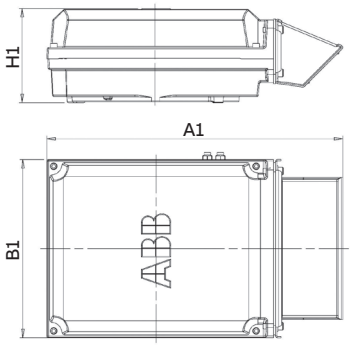

—
03

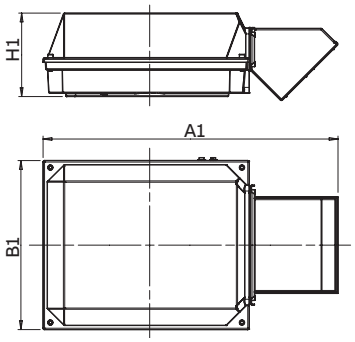

—
04

Terminal box types acc. to current capacity	A1	B1	H1	Gland plate opening
63	248	248	109	B
160	291	302	154	C
210	416	306	177	C
370	451	347	200	D
750 with E-D adapter	686	413	219	D
750 without E-D adapter	523	413	219	E
1200 with E-2D adapter	1000	578	285	2xD
1200 without E-2D adapter	697	578	285	E
1200 with E-2E adapter	1195	578	285	2xE
1200 with E-3D adapter	1250	578	285	3xD

Dimensions for terminal box inlets

Corresponds to motor sizes 160 and above

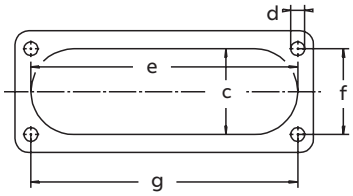

Flange opening	c mm	e mm	f mm	g mm	d thread type
B	31	120	30	120	M6
C *)	71	194	62	193	M6
C **)	67	193	62	193	M8
D	100	300	80	292	M10
E	115	370	100	360	M12

Note! The C flange is different depending on frame size
*) for frame sizes 200-225
**) for frame size 280

Terminal box
Cable glands

The motors are delivered as standard with plugged cable entries or cable sealing units as described in the previous section. There is available a broad selection of different type of cable glands, which are suitable for different types of cable and outer diameter ranges.

Size of threaded opening for cable gland	Cable gland(s) nickel plated brass, variant code 230 or 731	EMC Cable gland(s) nickelplated brass, variant code 704	Cable gland(s) plastic, variantcode 375 or 376
Metric (std)	**Cable outer diameter, mm**	**Cable outer diameter, mm**	**Cable outer diameter, mm**
M16 x 1.5	4-12	4-8	4-12
M20 x 1.5	4-12	4-12	4-12
M25 x 1.5	10-18	10-18	10-18
M32 x 1.5	14-24	14-24	14-24
M40 x 1.5	22-32	22-32	22-32
M50 x 1.5	26-35	26-35	26-35
M63 x 1.5 *)	35-45	35-45	35-45
M75 x 1.5	46-62	46-62	not available

Threaded openings for cable glands with NPT thread (variant code 730)

The standard delivery for the motors are provided with openings for cable glands with metric threads as listed in the section describing the standard terminal box. If NPT threads will be needed, the variant code 730 is to be ordered. If nothing else is stated on the order, the sizes in tables below will be delivered.

Motor frame size	Main cable entries	NPT plug
80-112	1 x ¾”	-
132	2 x ¾”	1 x ¾”
160-180	2 x 1 ¼”	1 x 1 ¼”
200-250	2 x 1 ½”	1 x 1 ½”
280	2 x 2”	1 x 2”
315-450	2 x 3”	1 x 3”

Motor frame size	Cable entries for auxiliaries	NPT plug
80-112	2 x ¾”	2 x ¾”
132	1 x ¾”	1 x ¾”
160-450	2 x ¾”	2 x ¾”

Gland plates with threaded openings for cable glands of nonstandard size

If the standard size of threaded openings for cable glands is not suitable then nonstandard size openings are also available, either by fitting the reducers to make the openings smaller or by increasing the amount or size of holes. The maximum possible size and amount for each gland plate size is listed below. Threaded openings of non-standard size can be ordered by using variant codes 554, 555 and 727.

Gland plate size	Maximum amount and size of threaded holes
B	2 x M40
C	2 x M63
D	2 x M90 or 3 x M75
E	2 x M90 or 4 x M75

Terminal box

Terminal boxes and boards

—
01 Integrated terminal box for motor sizes 71 - 132. Tapped holes for cable entries.

02 Terminal board for motor sizes 71 - 80.

03 Terminal board for motor sizes 90 - 112, IE2, and 90 - 100, IE3.

04 Terminal board for motor sizes 132, IE2, and motor sizes 112 - 132, IE3.

05 Terminal box for motor sizes 160 - 250. Connection flanges with tapped cable entries.

06 Terminal board for motor sizes 160 - 250.

The pictures below show standard terminal boxes and the corresponding terminal boards for various motor sizes.

Motor sizes 71 - 132

—
01

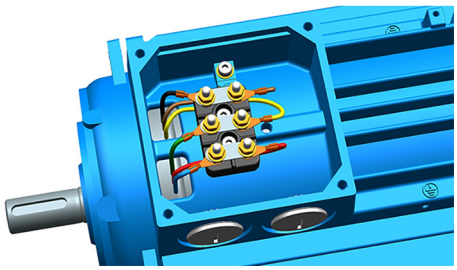

—
02

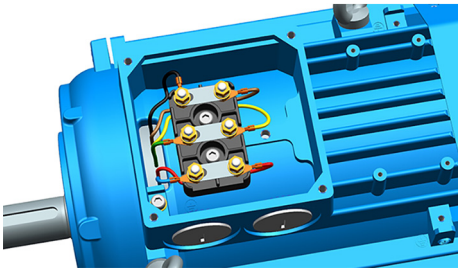

—
03

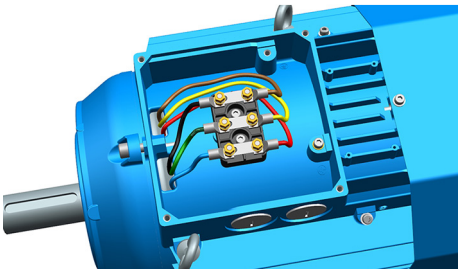

—
04

Motor sizes 160 - 250

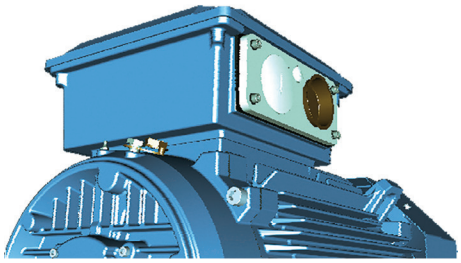

—
05

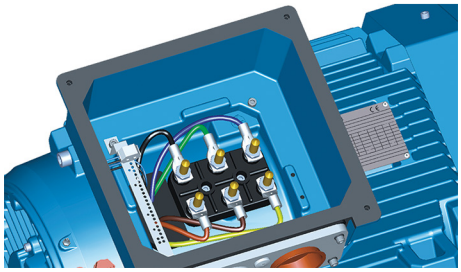

—
06

—
07 Terminal box for motor sizes 280 - 315, except LKC. Connection flange with tapped cable entries.

08 Terminal board for motor sizes 280 - 315, except LKC.

09 Terminal box for motor sizes 315 LKC and 355 - 400. Adapter and cable sealing end unit.

10 Terminal board for motor sizes 315 LKC and 355 - 400.

11 Terminal box for motor sizes 450, with adapter and cable sealing end unit.

12 Terminal board for motor sizes 450.

Motor sizes 280 - 315

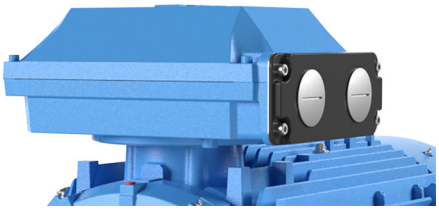

—
07

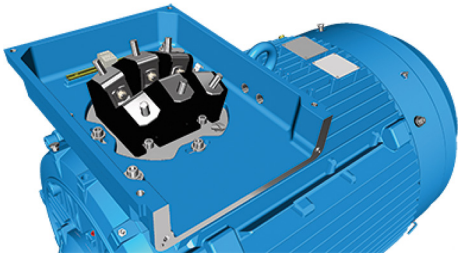

—
08

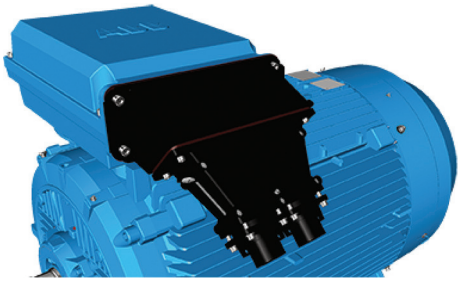

—
09

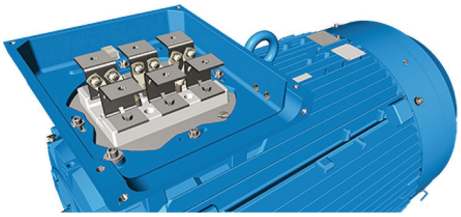

—
10

Motor size 450

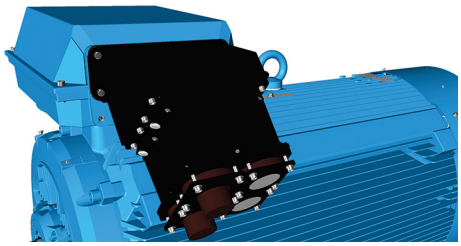

—
11

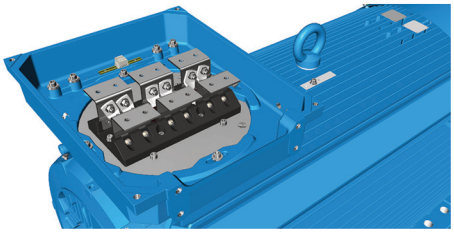

—
12

Terminal box

Terminal box alternatives

—
01 Main terminal box.

02 Adapters, Flange with glands; cable sealing end units.

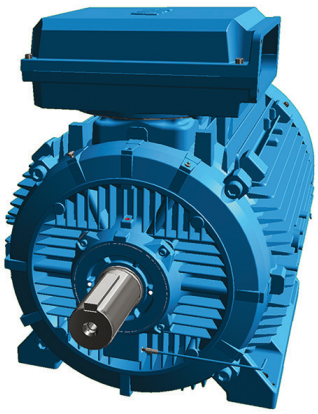

—
01

—
02

Optional adapters
There is a broad selection of cable termination accessories available to allow termination of one or several cables. The most common ones are explained below.

How to order?
- Check first that the teminal box itself allows mounting of the desired cable and cores (refer to motor type and terminal box type cross reference on previous page)
- If very large cables are used it might be necessary to use a larger terminal box than standard. Select the right cable gland(s) or cable sealing end unit(s) that match outer diamater of the cable(s)
- Select appropriate adapter or flange
- Note that turning the terminal box to a non-standard position might limit the use of some adapters.

Main terminal box and maximum single core cross-section
You can select one size larger than standard terminal box if a larger single cross-section is needed. The standard sizes of the main terminal box are listed in the following table. The terminal box is named according to its current-carrying capacity, from 120 to 1200. Check also the capacity of the cable entry to make sure that the cables fit. A larger terminal box can be ordered with variant code 019.

Standard terminal box	Large terminal box	Size of opening, large box	Max single cross-section mm² /phase
120	210	B	1 x 70
210	370	C	2 x 240
370	750	D	2 x 300
750	1200	E	4 x 500
1200	-	-	-

Ordering example

Motor Cables	200 kW, 4 pole, 400 V 50 Hz 2 pieces, outer diameter 58 mm, single core cross section 185 mm², clamping device needed, cables coming from below
Needed one terminal box for anticondensation heaters and another for temperature detectors, material must be cast iron.	
Motor	M3BP 315 MLA 4-pole, B3
Adapter	D-D - variant code 293
Cable sealing end unit	Variant code 278
Clamping	Variant code 231
Auxiliaries	Variant codes 380, 567, 568

Optional adapters

To allow easy termination of cables entering the terminal box from above or below, an angle adapter is recommended. These are available for motor sizes 280 and above and can also be used to allow the mounting of several cable sealing end units or gland plates. For exact suitability on a certain motor size, refer to the 'terminal box opening' column in section Standard terminal box.

Adapter				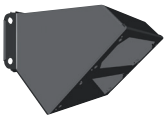	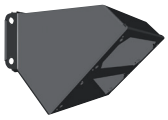	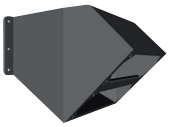
Variant code	292	293	294	295	296	444
Suited for motor sizes	280	315, 355	315 LKC IE2, 355 SM_ 2-4 poles, 400 - 450	315 LKC IE2, 355 SM_ 2-4 poles, 400 - 450	315 LKC IE2, 355 SM_ 2-4 poles, 400 - 450	315 LKC IE2, 355 SM_ 2-4 poles, 400 - 450
Opening to terminal box	C	D	E	E	E	E
Flange or opening for end unit	C	D	D	2 x D	3 x D	2 x E
Material	Steel	Steel	Steel	Steel	Steel	Steel
Notes			Included in type 750 terminal box when 750 is the standard size.	Included in type 1200 terminal box when 1200 is the standard size.	Only possible on type 1200 terminal box	Only possible on type 1200 terminal box

Cable sealing end units

As an alternative to flanges and cable glands, cable sealing end units can be used. These allow more space for spreading the cores for easy termination.

Cable sealing end units have rubber-sealed entries for one of two main cables. In addition, there are two plugged M20 holes for auxiliary cables.

	Small	Medium	Large
End unit	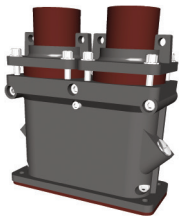	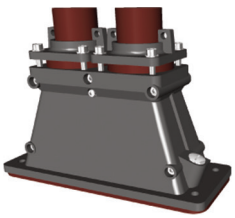	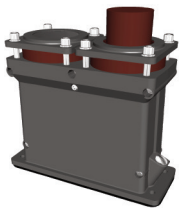
Variant code	277	278	279
Suited for motor sizes	280	315, 355, except 315 LKC IE2, 355 SM_ 2-4 poles	315, 355, except 315 LKC IE2, 355 SM_ 2-4 poles
Opening to terminal box	C	D	D
Cable outer diameter	1 - 2 cables, 48 - 60 mm	1 - 2 cables, 48 - 60 mm	1 - 2 cables, 60 - 80 mm
Cable entry for auxiliary cable	2 x M20 plugged holes	2 x M20 plugged holes	2 x M20 plugged holes
Additional optional variants	EMC cable gland (704); Standard gland with clamping device (231)	EMC cable gland (704); Standard gland with clamping device (231)	EMC cable gland (704); Standard gland with clamping device (231)

Auxiliary terminal box

You can equip motors from frame size 160 upward with one or several auxiliary terminal boxes for connection of auxiliaries like heaters or temperature detectors. The standard auxiliary terminal box material for motor sizes 280 - 450 is aluminum and for 160 - 250 cast iron. For 280 - 450, cast iron as box material is also available as an option.

Connection terminals are of spring-loaded type for quick and easy connection. These are suitable for up to 2.5 mm^2 wires.

Auxiliary terminal boxes for 280 - 450 are equipped with an earthing terminal. The first auxiliary terminal box is located on the right-hand side at D-end as standard.

The standard cable entry size is M20 for the aluminum box and M16 for the cast iron box, and the number of entries depends on the terminal box type and the number of selected auxiliaries

Related variant codes	
380	Separate terminal box for temperature detectors,standard material
418	Separate terminal box for auxiliaries, standard material
567	Separate terminal box material: cast iron
568	Separate terminal box for heating elements, standard material
569	Separate terminal box for brake

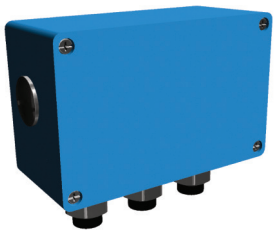

Small auxiliary aluminum terminal box for motor sizes 280 - 450
(variant codes 418, 568, 380, 569)
The size of terminal box ordered with these codes depends on the number of accessories ordered.
80 x 125 mm, max 12 strips. Earthing size M4

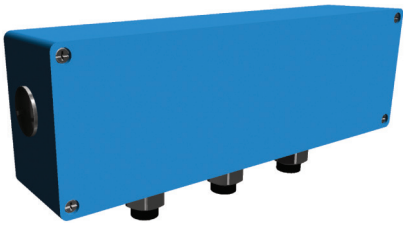

Large auxiliary aluminum terminal box for motor sizes 280 - 450.
The size of terminal box ordered with these codes depends on the number of accessories ordered.
80 x 250 mm, max 30 strips. Earthing size M4

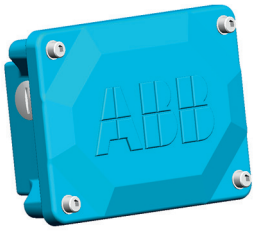

Auxiliary cast iron terminal box
Frame size for motor sizes 160 - 250
(variant code 418):
111 x 162 mm, max. 18 strips. No earthing.

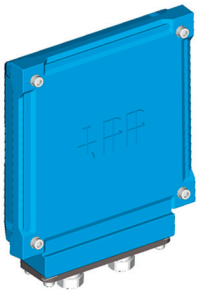

Frame size for motor sizes 280 - 450
(variant code 567):
208 x 180 mm, max 30 strips. Earthing size M6

Dimension drawings

Foot-mounted cast iron motors, 71 - 132

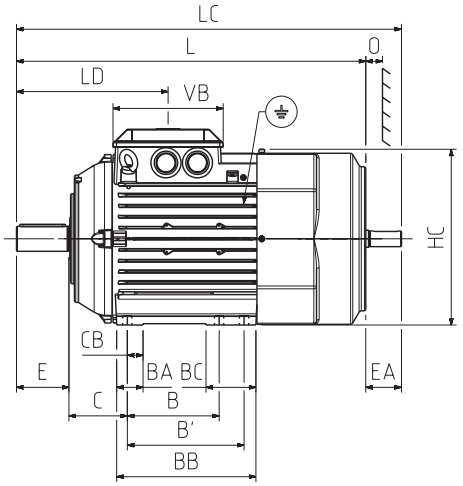

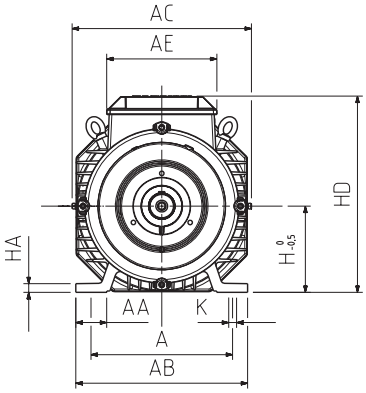

D-end

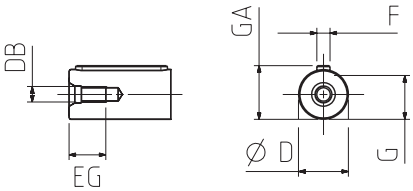

N-end

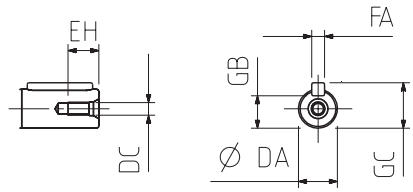

Mounting options IM B3 (IM 1001), IM B6 (IM 1051), IM B7 (IM 1061), IM B8 (IM 1071), IM V5 (IM 1011), IM V6 (IM 1031)

Motor size	A	AA	AB	AC	AE	B	B'	BA	BB	BC	C	CB	D-Tol.	DA	DB	DC	E
71 M_	112	24	136	139	105	90	-	24	110	24	45	10	14-j6	11	M5	M4	30
71 ML_	112	24	136	139	105	90	-	24	110	24	45	10	14-j6	11	M5	M4	30
80 M_	125	28	154	157	105	100	-	28	124	28	50	12	19-j6	14	M6	M5	40
80 ML_	125	28	154	157	105	100	112	28	136	40	50	12	19-j6	14	M6	M5	40
90 SL_	140	30	170	177	118	100	125	28	150	54	56	12	24-j6	14	M8	M5	50
90 L_	140	30	170	177	118	100	125	28	150	54	56	12	24-j6	14	M8	M5	50
100 L_	160	38	200	197	118	140	-	34	172	34	63	16	28-j6	19	M10	M6	60
100 ML_	160	38	200	197	118	140	-	34	172	34	63	16	28-j6	19	M10	M6	60
100 LK_	160	38	200	197	118	140	160	34	192	54	63	16	28-j6	19	M10	M6	60
IE2 112	190	41	230	197	110	140	-	34	172	34	70	16	28-j6	19	M10	M6	60
IE3 112	190	41	230	239	168	140	-	34	170	34	70	14	28-j6	19	M10	M6	60
132	216	47	262	273	168	140	178	40	212	76	89	16	38-k6	24	M12	M8	80

Motor size	EA	EG	EH	F	FA	G	GA	GB	GC	H	HA	HC	HD	K	L	LD	O	VB
71 M_	23	12.5	10	5	4	11	16	8.5	12.5	71	9	139	178	7	264	112	20	105
71 ML_	23	12.5	30	5	4	11	16	8.5	12.5	71	9	139	178	7	294	112	20	105
80 M_	30	16	12.5	6	5	15.5	21.5	11	16	80	10	157	194	10	331	126	20	105
80 ML_	30	16	12.5	6	5	15.5	21.5	11	16	80	10	157	194	10	363	126	20	105
90 SL_	30	19	12.5	8	5	20	27	11	16	90	10	178	218	10	356	151	20	118
90 L_	30	19	12.5	8	5	20	27	11	16	90	10	178	218	10	390	151	20	118
100 L_	40	22	16	8	6	24	31	15.5	21.5	100	12	198	247	12	381	164	25	118
100 ML_	40	22	16	8	6	24	31	15.5	21.5	100	12	198	247	12	403	164	25	118
100 LK_	40	22	16	8	6	24	31	15.5	21.5	100	12	198	247	12	435	164	25	118
IE2 112	40	22	16	8	6	24	31	16	22	112	12	197	259	12	403	164	25	168
IE3 112	40	22	16	8	6	24	31	16	22	112	12	223	258	12	442	200	25	168
132	50	28	19	10	8	33	41	20	27	132	13	268	300	12	532	231	30	168

Tolerances		Tolerances		Tolerances	
A, B	± 0.8	F, FA	ISO h9	N	ISO j6
D, DA	ISO j6	H	+0 -0.5	C, CA	± 0.8

Dimension drawings

Flange- and foot & flange mounted cast iron motors, 71 – 132

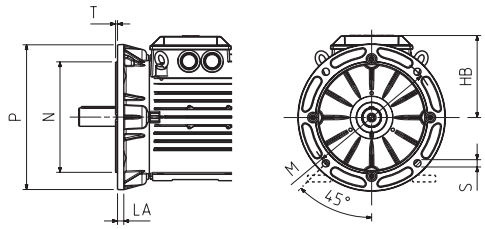

Mounting options IM B5 (IM 3001), V1 (IM 3011), V3 (IM 3031), IM B35 (IM 2001), IM V15 (IM 2011), IM V36 (IM 2031)

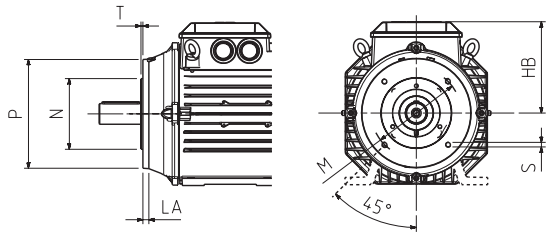

Mounting options IM B14 (IM 3601), V18 (IM 3611), V19 (IM 3631), IM B34 (IM 2101), V17 (IM 2111)

Large flange

Motor size	HB	LA	M	N	P	S	T
71	108	9	130	110	160	10	3.5
80	114	10	165	130	200	12	3.5
90	128	10	165	130	200	12	3.5
100	147	11	215	180	250	15	4
IE2 112	148	11	215	180	250	15	4
IE3 112	146	11	215	180	250	15	4
132	168	12.5	265	230	300	15	4

Small flange

Motor size	HB	LA	M	N	P	S	T
71	108	8	85	70	105	M6	2.5
80	114	8	100	80	120	M6	3
90	128	10	115	95	140	M8	3
100	147	10	130	110	160	M8	3,5
IE2 112	148	10	130	110	160	M8	3.5
IE3 112	146	14	130	110	160	M8	3.5
132	168	12	165	130	200	M10	3.5

Tolerances	
A, B	± 0.8
D, DA	ISO j6
F, FA	ISO h9
H	+0 -0.5
N	ISO j6
C, CA	± 0.8

Dimension drawings

Foot-mounted cast iron motors, 160 - 250

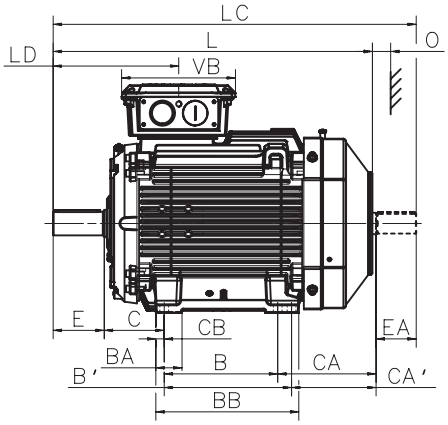

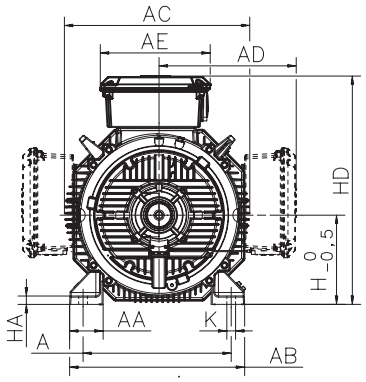

D-end

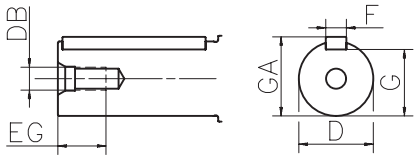

N-end

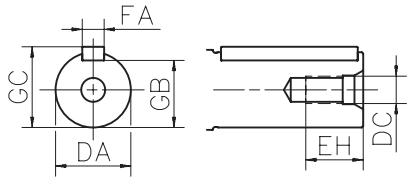

Mounting options IM B3 (IM 1001), IM B6 (IM 1051), IM B7 (IM 1061), IM B8 (IM 1071), IM V5 (IM 1011), IM V6 (IM 1031)

Motor size	Poles	A	AA	AB	AC	AD	AE	B	B'	BA	BB	C	CA	CA'	CB	D	DA	DB	DC	E
160 [1]	2-8	254	67	310	338	261	257	210	254	69	294	108	164	126	20	42	32	M16	M12	110
160 [2]	2-8	254	67	310	338	261	257	210	254	69	294	108	262	224	20	42	32	M16	M12	110
180	2-8	279	67	340	381	281	257	241	279	68	317	121	263	225	19	48	32	M16	M12	110
200	2-8	318	69	378	413	328	300	267	305	80	345	133	314	276	20	55	45	M20	M16	110
225	2	356	84	435	460	348	300	286	311	69	351	149	314	289	20	55	55	M20	M20	110
225	4-8	356	84	435	460	348	300	286	311	69	351	149	314	289	20	60	55	M20	M20	140
250	2	406	92	480	508	376	300	311	349	69	392	168	281	243	23	60	55	M20	M20	140
250	4-8	406	92	480	508	376	300	311	349	69	392	168	281	243	23	65	55	M20	M20	140

Motor size	Poles	EA	EG	EH	F	FA	G	GA	GB	GC	H	HA	HD	K	L	LC	LD	O	VB
160 [1]	2-8	80	36	28	12	10	37	45	27	35	160	23	421	14.5	584	671.5	287.5	45	257
160 [2]	2-8	80	36	28	12	10	37	45	27	35	160	23	421	14.5	681	768.5	287.5	45	257
180	2-8	80	36	28	14	10	42.5	51.5	27	35	180	23	461	14.5	726	815	300.5	50	257
200	2-8	110	42	36	16	14	49	59	39.5	48.5	200	23	528	18.5	821	934	320.5	70	311
225	2	110	42	42	16	16	49	59	49	59	225	23	573	18.5	849	971	313.5	80	311
225	4-8	110	42	42	18	16	53	64	49	59	225	23	573	18.5	879	1001	343.5	80	311
250	2	110	42	42	18	16	53	64	49	59	250	23	626	24.0	884	1010	343.5	90	311
250	4-8	110	42	42	18	16	58	69	49	59	250	23	626	24.0	884	1010	343.5	90	311

Tolerances	
A, B	ISO js14
C, CA	± 0.8
D, DA	ISO k6 < Ø 50 mm
	ISO m6 > Ø 50 mm
F, FA	ISO h9
H	+0 -0.5

Footnotes

Generation code: G:
[1] MLA, MLB 2 and 8
[2] MLB 4-6, MLC 2-8, MLD, MLE

Generation codes K and L:
[1] MLA 2 only
[2] All others

Dimension drawings

Flange- and foot & flange mounted cast iron motors, 160 - 250

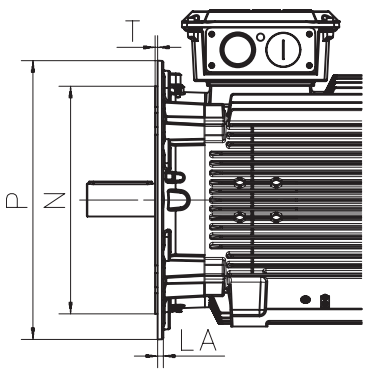

160 to 200

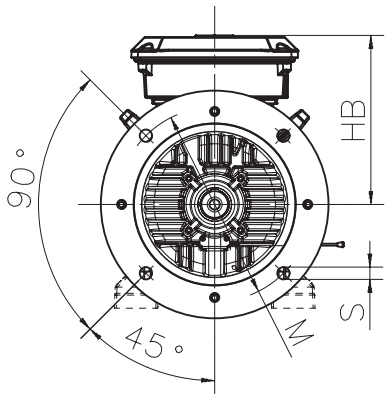

225 to 250

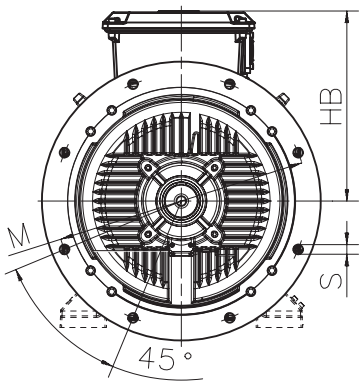

Mounting options IM B5 (IM 3001), V1 (IM 3011), V3 (IM 3031), IM B35 (IM 2001), IM V15 (IM 2011), IM V36 (IM 2031)

Motor size	Poles	HB	LA	M	N	P	S	T
160 [1)]	2-8	261	20	300	250	350	19	5
160 [2)]	2-8	261	20	300	250	350	19	5
180	2-8	281	15	300	250	350	19	5
200	2-8	328	20	350	300	400	19	5
225	2	348	20	400	350	450	19	5
225	4-8	325	20	400	350	450	19	5
250	2	376	24	500	450	550	19	5
250	4-8	376	24	500	450	550	19	5

Tolerances	
A, B	ISO js14
C, CA	± 0.8
D, DA	ISO k6 < Ø 50 mm
	ISO m6 > Ø 50 mm
F, FA	ISO h9
H	+0 -0.5
N	ISO j6

Footnotes

Generation code G:
[1)] MLA, MLB 2 and 8
[2)] MLB 4-6, MLC 2-8, MLD, MLE

Generation codes K and L:
[1)] MLA 2 only
[2)] All others

Dimension drawings

Foot-mounted cast iron motors, 280 - 315

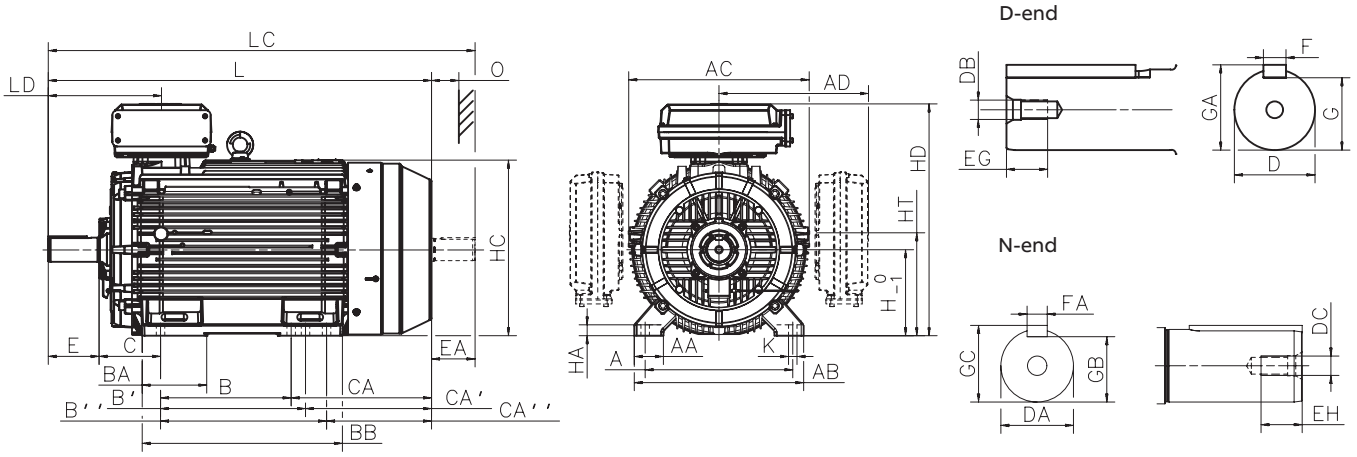

Mounting options IM B3 (IM 1001), IM B6 (IM 1051), IM B7 (IM 1061), IM B8 (IM 1071), IM V5 (IM 1011), IM V6 (IM 1031)

Motor size	Poles	A	AA	AB	AC	AD [1]	AD [2]	B	B'	B''	BA	BB	C	CA	CA'	CA''	D	DA	DB	DC	E
280 SM_	2	457	84	530	577	481	-	368	419	-	147	506	190	400	349	-	65	60	M20	M20	140
	4-12	457	84	530	577	481	-	368	419	-	147	506	190	400	349	-	75	65	M20	M20	140
280 ML_	2	457	84	530	577	-	504	419	457	-	193	608	190	400	349	-	65	60	M20	M20	140
	4-12	457	84	530	577	481	504	419	457	-	193	608	190	400	349	-	75	65	M20	M20	140
315 SM_	2	508	100	590	654	545	-	406	457	-	180	558	216	420	369	-	65	60	M20	M20	140
	4-12	508	100	590	654	545	-	406	457	-	180	558	216	420	369	-	80	75	M20	M20	170
315 ML_	2	508	100	590	654	545	-	457	508	-	212	669	216	480	429	-	65	60	M20	M20	140
	4-12	508	100	590	654	545	-	457	508	-	212	669	216	480	429	-	90	75	M24	M20	170
315 LK_	2	508	100	590	654	562	576	508	560	710	336	851	216	635	583	433	65	60	M20	M20	140
	4-12	508	100	590	654	562	576	508	560	710	336	851	216	635	583	433	90	75	M24	M20	170

Motor size		EA	EG	EH	F	FA	G	GA	GB	GC	H	HA	HC	HD [1] top-m.	HD [2] top-m.	HT	K	L	LC	LD top-m.	LD side-m.	O
280 SM_	2	140	40	40	18	18	58	69	53	64	280	31	564	762	-	337.5	24	1088	1238	336	539	100
	4-12	140	40	40	20	18	67.5	79.5	58	69	280	31	564	762	-	337.5	24	1088	1238	336	539	100
280 ML_	2	140	40	40	18	18	58	69	53	64	280	31	564	-	785	337.5	24	1189	1340	336	590	100
	4-12	140	40	40	20	18	67.5	79.5	58	69	280	31	564	762	785	337.5	24	1189	1340	336	590	100
315 SM_	2	140	40	40	18	18	58	69	53	64	315	40	638	852	-	375	28	1174	1322	356	585	115
	4-12	140	40	40	22	20	71	85	67.5	79.5	315	40	638	852	-	375	28	1204	1352	386	615	115
315 ML_	2	140	40	40	18	18	58	69	53	64	315	40	638	852	-	375	28	1285	1433	356	640	115
	4-12	140	48	40	25	20	81	95	67.5	79.5	315	40	638	852	-	375	28	1315	1463	386	670	115
315 LK_	2	140	40	40	18	18	58	69	53	64	315	40	638	852	880	359	28	1491	1639	356	721	115
	4-12	140	48	40	25	20	81	95	67.5	79.5	315	40	638	852	880	359	28	1521	1669	386	751	115

Tolerances		Footnotes
A, B	± 0.8	[1] Terminal box 370
C, CA	± 0.8	[2] Terminal box 750
D	ISO k6 < Ø 50 mm	
	ISO m6 > Ø 50 mm	
F	ISO h9	
H	+ 0 -0.5	
N	ISO j6	

Dimension drawings

Flange- and foot & flange mounted cast iron motors, 280 - 315

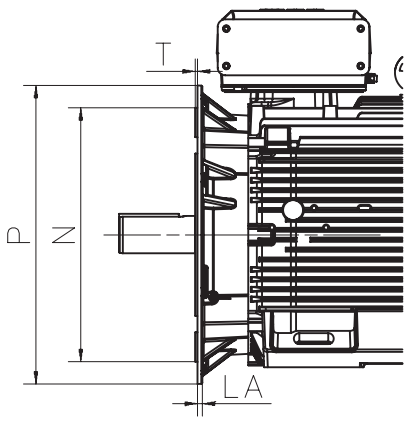

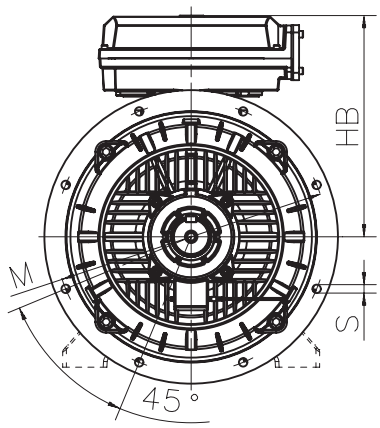

Mounting options IM B5 (IM 3001)V1, (IM 3011), V3 (IM 3031), IM B35 (IM 2001), IM V15 (IM 2011), IM V36 (IM 2031)

Motor size	Poles	HB [1)]	HB [2)]	LA	M	N	P	S	T
280 SM_	2	482	-	23	500	450	550	18	5
	4-12	482	-	23	500	450	550	18	5
280 ML_	2	-	505	23	500	450	550	18	5
	4-12	482	505	23	500	450	550	15	5
315 SM_	2	537	-	25	600	550	660	23	6
	4-12	537	-	25	600	550	660	23	6
315 ML_	2	537	-	25	600	550	660	23	6
	4-12	537	-	25	600	550	660	23	6
315 LK_	2	537	565	25	600	550	660	23	6
	4-12	537	565	25	600	550	660	23	6

Tolerances	
A, B	± 0.8
D	ISO j6
F	ISO h9
H	+0 - 0.1
N	ISO j6 (280 SM_)
	ISO js6 (315_)
C	± 0.8

Footnotes

[1)] Terminal box 370
[2)] Terminal box 750

Dimension drawings

Foot-mounted cast iron motors, 355 - 450

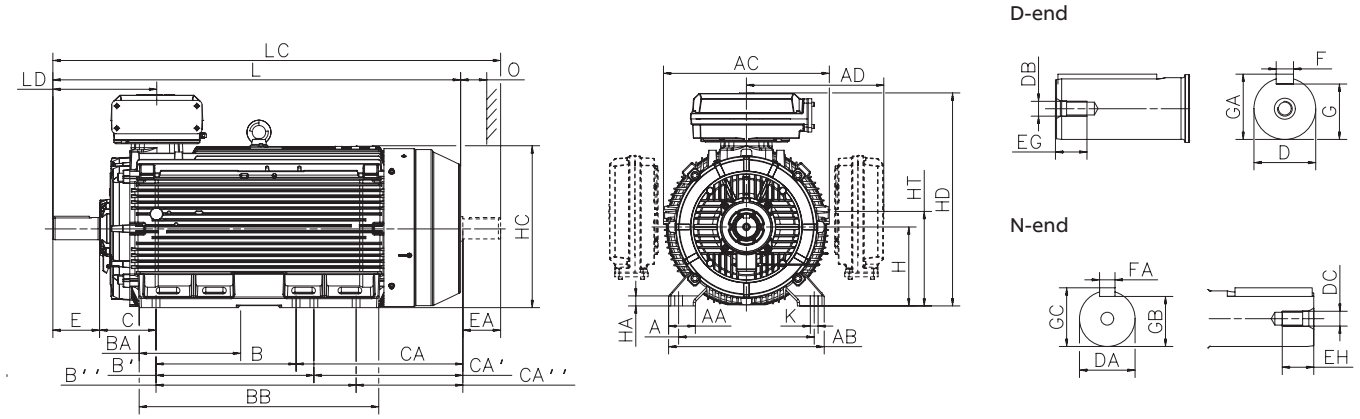

Mounting options IM B3 (IM 1001), IM B6 (IM 1051), IM B7 (IM 1061), IM B8 (IM 1071), IM V5 (IM 1011), IM V6 (IM 1031)

Motor size		A	AA	AB	AC	AD [1]	AD [2]	B	B'	B''	BA	BB	C	CA	CA'	CA''	D	DA	DB	DC	E	EA	EG	EH
355 SM_	2	610	120	700	746	604	618	500	560	-	221	722	254	525	465	-	70	70	M20	M20	140	140	42	40
	4-12	610	120	700	746	604	618	500	560	-	221	722	254	525	465	-	100	90	M24	M24	210	170	51	48
355 ML_	2	610	120	700	746	604	618	560	630	-	267	827	254	500	570	-	70	70	M20	M20	140	140	42	40
	4-12	610	120	700	746	604	618	560	630	-	267	827	254	500	570	-	100	90	M24	M24	210	170	51	48
355 LK_	2	610	120	700	746	604	618	630	710	900	447	1077	254	750	670	480	70	70	M20	M20	140	140	42	40
	4-12	610	120	700	746	604	618	630	710	900	447	1077	254	750	670	480	100	90	M24	M24	210	170	51	48
400 L_	2	710	150	840	834	-	660	900	1000	-	410	1156	224	567	467	-	80	70	M20	M20	170	140	42	40
	4-12	710	150	840	834	-	660	900	1000	-	410	1156	224	567	467	-	110	90	M24	M24	210	170	50	50
400 LK_ [5]	2	686	150	840	834	-	660	710	800	900	410	1156	280	701	611	511	80	70	M20	M20	170	140	42	40
	4-12	686	150	840	834	-	660	710	800	900	410	1156	280	701	611	511	100	90	M24	M24	210	170	50	50
450	2	800	160	950	966	-	-	1000	1120	1250	450	1420	250	-	-	-	80	-	M20	-	170	-	-	-
	4-12	800	160	950	966	-	-	1000	1120	1250	450	1420	250	737	617	487	120	100	M24	M24	210	210	50	50

Motor size	Poles	F	FA	G	GA	GB	GC	H	HA	HC	HD [1] top-	HD [2] top-	HD [3] top-	HD [4] side-m.	HT	K	L	LC	LD [1] top-	LD [2] top-	LD [3] top-	LD side-m.	O
355 SM_	2	20	20	62.5	74.5	62.5	74.5	355	45	725	944	958	-	843	425	35	1409	1559	397	397	-	679	130
	4-12	28	25	90	106	81	95	355	45	725	944	958	-	843	425	35	1479	1659	467	467	-	750	130
355 ML_	2	20	20	62.5	74.5	62.5	74.5	355	45	725	944	958	-	843	425	35	1514	1664	397	397	-	732	130
	4-12	28	25	90	106	81	95	355	45	725	944	958	-	843	425	35	1584	1764	467	467	-	802	130
355 LK_	2	20	20	62.5	74.5	62.5	74.5	355	45	725	944	958	-	843	425	35	1764	1914	397	397	-	857	130
	4-12	28	25	90	106	81	95	355	45	725	944	958	-	843	425	35	1834	2014	467	467	-	927	130
400 L_	2	22	20	71	85	67.5	79.5	400	45	814	-	1045	-	943	477	35	1851	2001	458	458	-	909	150
	4-12	28	25	100	116	81	95	400	45	814	-	1045	-	943	477	35	1891	2071	498	498	-	949	150
400 LK_ [5]	2	22	20	71	85	67.5	79.5	400	45	814	-	1045	-	943	477	35	1851	2001	458	458	-	909	150
	4-12	28	25	90	106	81	95	400	45	814	-	1045	-	943	477	35	1891	2071	498	498	-	949	150
450	2	22	-	71	85	-	-	450	46	933	-	1169	1293	-	-	42	2147	-	-	485	520	-	180
	4-12	32	28	109	127	100	116	450	46	933	-	1169	1293	-	-	42	2187	2407	-	525	560	-	180

Tolerances		Tolerances	
A, B	± 0.8	H	+0 -0.1
D, DA	ISO m6	N	ISO j6
F, FA	ISO h9	C, CA	± 0.8

Footnotes

[1] Terminal box 370
[2] Terminal box 750
[3] Terminal box 1200
[4] Lifting lugs included
[5] Same electrical values as with 400 L_, alternative dimensions.

Dimension drawings

Flange- and foot & flange mounted cast iron motors, 355 - 450

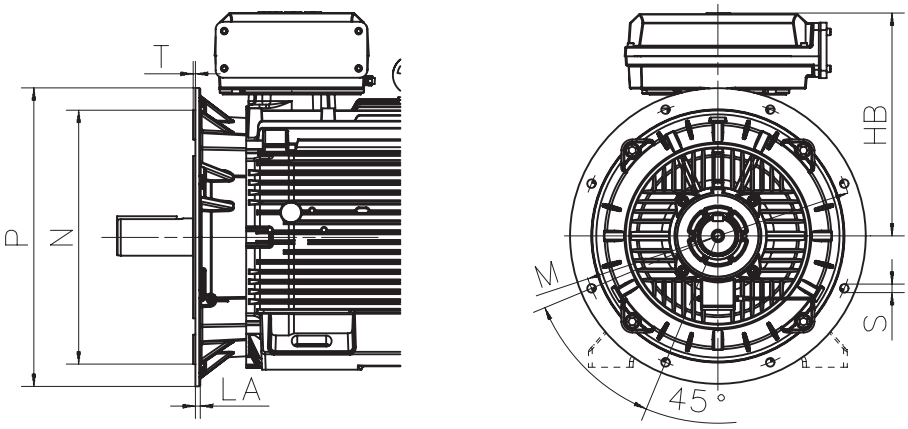

Bottom view

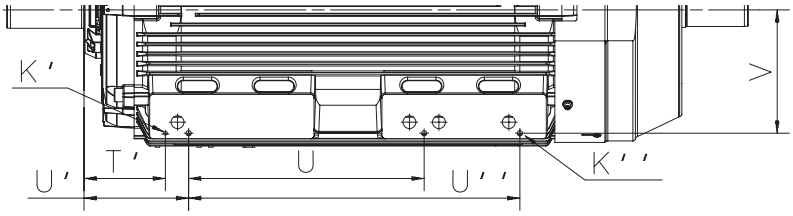

Mounting options IM B5 (IM 3001), V1 (IM 3011), V3 (IM 3031), IM B35 (IM 2001), IM V15 (IM 2011), IM V36 (IM 2031)

Flange

Motor size	Poles	HB [1]	HB [2]	HB [3]	LA	M	N	P	S	T
355 SM_	2	589	603	-	25	740	680	800	23	6
	4-12	589	603	-	25	740	680	800	23	6
355 ML_	2	589	603	-	25	740	680	800	23	6
	4-12	589	603	-	25	740	680	800	23	6
355 LK_	2	589	603	-	25	740	680	800	23	6
	4-12	589	603	-	25	740	680	800	23	6
400 L_	2	-	645	-	26	940	880	1000	28	6
	4-12	-	645	-	26	940	880	1000	28	6
400 LK_ [4]	2	-	645	-	26	740	680	800	24	6
	4-12	-	645	-	26	740	680	800	24	6
450	2	-	719	843	33	1080	1000	1150	28	6
	4-12	-	719	843	33	1080	1000	1150	28	6

Bottom

Motor size	Poles	K'	K''	T'	U	U'	U''	V
355 SM_	2	10	M16	120	280	560	-	670
	4-12	10	M16	120	282	560	-	670
355 ML_	2	10	M16	120	282	630	-	670
	4-12	10	M16	120	282	630	-	670
355 LK_	2	10	M16	120	282	630	890	670
	4-12	10	M16	120	282	630	890	670
400 L_	2	10	M16	248	287	887	-	802
	4-12	10	M16	248	287	887	-	802
400 LK_ [4]	2	10	M16	248	287	748	916	802
	4-12	10	M16	248	287	748	916	802
450	2	10	M16	274	290	861	-	912
	4-12	10	M16	274	323	841	-	912

Tolerances	
A, B	± 0.8
D, DA	ISO m6
F, FA	ISO h9
H	+0 -1.0
N	ISO js6
C, CA	± 0.8

Footnotes

[1] Terminal box 370
[2] Terminal box 750
[3] Terminal box 1200
[4] Same electrical values as with 400 L_, alternative dimensions.

Accessories
Built-in brake (variant code 412)

Brake design
Electromagnetic disc brakes are applied by the action of a set of springs and are released when voltage is applied to the brake coil.

This means that the motor will brake automatically in case of any voltage failure, as significant safety feature. The brake is always functional, irrespective of the mounting position of the brake motor.

Detailed view

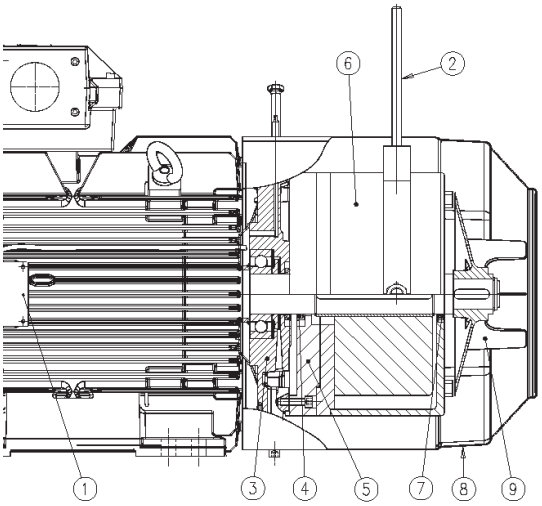

1 Connection box, (with rectifier, optional)
2 Manual release (optional)
3 Modified N-end shield
4 V-ring seal
5 Adapter flange for brake
6 Brake
7 V-ring seal
8 Fan cover
9 Fan

Brake disc
The brake linings are made of asbestos-free material. The linings are highly resistant to wear and have excellent thermal conductivity, providing consistent performance also in high temperatures.

The brake disc withstands a large number of braking instances and is insensitive to dust and moisture.

Note that changing from a used to a new disc will result in a different braking torque.

Replacing the brake disc
The brake disc must be replaced when the minimum permissible lining thickness has been reached. For minimum lining thickness, refer to the brake manufacturer's catalog.

Rectifier
Rectifier is a devise for DC brake applications. It is highly resistant to temperature changes as well as to voltage peaks and has additional protection for the auxiliary contact of the contactor. Thanks to its compact design, it can be placed inside the motor's terminal box. Rectifier is an optional element.

Torque adjustment
Reducing the torque of the brake is possible with most brake types. Refer to the brake manufacturer's catalog or contact ABB for more information.

Manual release
Manual release bolts are provided as standard. A manual release handle is an optional element. Manual release overrides the action of brake springs as long as it is applied.

Though the manual release handle is optionally available for all motor sizes, it cannot be used in combination with the Pintsch Bamag brake type SFB.

Brake rating plates
The brake comes with two rating plates, one attached to the brake itself and another delivered loose, together with the motor. Variant code 412 is marked on the motor's rating plate (if it is listed among the five first codes on the motor order).

—
01 Foot-mounted: IM B3 (IM1001), IM B6 (IM 1051), IM B7 (IM1061), IM B8 (IM 1071), IM V5 (IM 1011), IM V6 (IM 1031).

02 Flange-mounted: IM B5 (IM 3001), IM V1 (IM 3011), IM V3 (IM 3031), IM B14 (IM 3601), IM V18 (IM 3611), IM V19 (IM 3631).

03 Foot- and flange-mounted: IM B35 (IM 2001), IM V15 (IM 2011), IM V36 (IM 2031).

Available brake types

Motors can be fitted with recommended brakes from either Pintsch Bamag or Stromag, as seen in the tables below. Other brakes can be provided on request.

Brake type	Brake torque Nm	For motor size
KFB 10	100	160
KFB 16	160	160 - 180
KFB 25	250	180 - 225
KFB 40	400	200 - 250
KFB 63	630	225 - 280
KFB 1000	1000	280 - 315
KFB 1600	1600	315 - 355
On request		355 - 450

Pintsch & Bamag, type KFB, IP 67, 110 V DC Electromagnetic Double-Disc Spring-Applied Brake

Brake type	Brake torque Nm	For motor size
SFB 16	160	200 - 225
SFB 25	250	200 - 225
SFB 40	400	225 - 250
SFB 63	630	250
SFB 100	1000	280 - 315
SFB 160	1600	315 - 355
SFB 250	2500	355 - 400
SFB 400	4000	400
On request		450

Pintsch & Bamag,type SFB, IP 67, 110 V DC Electromagnetic Double-Disc Spring-Applied Brake

Brake type	Brake torque Nm	For motor size
NFF 10	100	160
NFF 16	160	160 - 180
NFF 25	250	180 - 225
NFF 40	400	200 - 250
NFF 63	630	225 - 250
For sizes 280-450 on request		

Stromag, type NFF, 110 V DC, IP66

Options for the brake

On new manufacture only

- Hand release (not possible for Pintsch Bamag brake type SFB)
- Rectifier
- Micro switch
- Proximity switch (not possible for Stromag brake)
- Standstill heater

On request

- Special brake voltage
- Raised brake torque
- Combination with brake, separate cooling fan and/or tacho
- For other variants, please contact ABB

Dimensions of brake motor

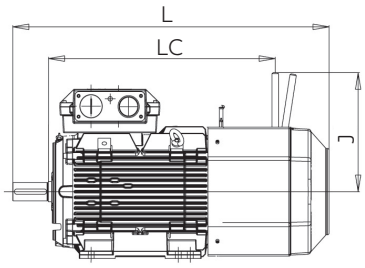

—
01

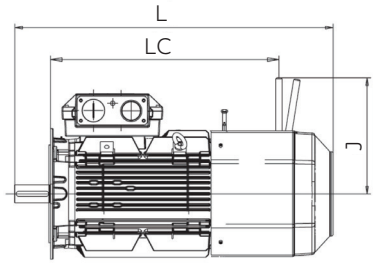

—
02

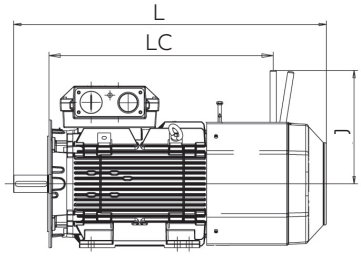

—
03

		Foot-mounted			Flange-mounted			Foot- and flange-mounted		
Motor size	**Poles**	**L**	**LC**	**J**	**L**	**LC**	**J**	**L**	**LC**	**J**
160 [1)]	2-8	773	511	372	773	511	372	773	511	372
160 [2)]	2-8	871	608	372	871	608	372	871	608	372
180	2-8	935	687	372	935	687	372	935	687	372
200	2-8	1011	695	460	1011	695	460	1011	695	460
225	2	1085	729	460	1085	729	460	1085	729	460
225	4-8	1115	729	460	1105	729	460	1115	729	460
250	2-8	1119	755	460	1119	755	460	1119	755	460

[1)]MLA-2, MLB-2, MLC-2, MLA-4, MLA-6, MLA-8 and MLB-8 -poles
[2)]MLD-2, MLE-2, MLB-4, MLC-4, MLD-4, MLB-6, MLC-6 and MLC-8 -poles
Motor sizes 280 to 450 on request. Other dimensions same as Process performance cast iron motors sizes 180 to 250

Accessories
Separate cooling

Axial fan, N-end
Fan motors with an axial fan are available for motor sizes 71-450 and can be ordered can be ordered with variant code 183.

The values here are given for 400 V, but technical data for other voltages can be found in MotSize.

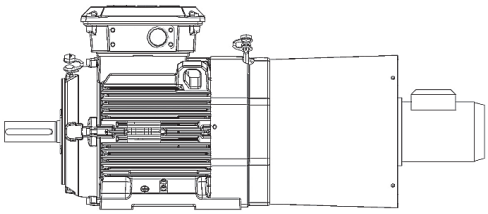

Axial fan, N-end, for motor sizes 71 - 132

Main motor	Fan motor type	Voltage range at 50 Hz, V	Voltage range at 60 Hz, V	Power W	Current A
M3BP 71	Wistro 132	380 - 500	380 - 575	29	0,06
		220 - 290	220 - 332	28	0,1
M3BP 80	Wistro 156	380 - 500	380 - 575	34	0,06
		220 - 290	220 - 332	34	0,1
M3BP 90	Wistro 169	380 - 500	380 - 575	75	0,19
		220 - 290	220 - 332	78	0,33
M3BP 100	Wistro 187	380 - 500	380 - 575	94	0,17
		220 - 290	220 - 332	87	0,31
M3BP 112	Wistro 210	380 - 500	380 - 575	99	0,17
		220 - 290	220 - 332	103	0,31
M3BP 132	Wistro 250	380 - 500	380 - 575	148	0,25
		220 - 290	220 - 332	146	0,45

Axial fan, N-end, for motor sizes 160 - 450, IE2

Main motor	Fan motor type (at 50 Hz)	Voltage V at 50 Hz	Power kW	Current A
M3BP 160 - 250	M3BP 71MA 4 B14	400	0.25	0.64
M3BP 280 - 315 ML	M3BP 80MD 4 B14	400	0.75	1.83
M3BP 315 LK - 355 SM	M3BP 90SLD 4 B14	400	1.5	3.0
M3BP 355 ML - 450 L	M3BP 100LD 4 B14	400	3.0	6.3

Axial fan, N-end, for motor sizes 160 - 450, IE3

Main motor	Fan motor type (at 50 Hz)	Voltage V at 50 Hz	Power kW	Current A
M3BP 160 - 250	M3BP 71MA 4 B14	400	0.25	0.64
M3BP 280 - 315 ML	M3BP 80MLE 4 B14	400	0.75	1.7
M3BP 315 LK - 355 SM	M3BP 90LB 4 B14	400	1.5	3.3
M3BP 355 ML, LK	M3BP 100MLB 4 B14	400	3.0	6.1

Fan on top, N-end
The non-axial fan available for motor sizes 280 and above is a Ziehl-Abbegg fan with an integrated motor. This cooling option is suited for 400 V, 50 Hz networks and can be ordered with variant code 422.

MV at 50 Hz Main motor	Fan motor type	Voltage V	Freq. Hz	Power kW	Current A
M3BP 280	Ziehl-Abegg RH35	400 VY	50	0.35	0.83
		460 VY	60	0.5	0.9
M3BP 315	Ziehl-Abegg RH40	400 VY	50	0.50	1.0
		460 VY	60	0.8	1.4
M3BP 355	Ziehl-Abegg RH45	400 VY	50	0.90	1.8
		460 VY	60	1.4	2.2
M3BP 400	Ziehl-Abegg RH50	400 VY	50	1.55	3.3
		460 VY	60	2.5	4.3
M3BP 450	Ziehl-Abegg RH56	400 VY	50	2.30	4.5
		460 VY	60	2.5	4.3

Special motor and fan on top, N-end
A special ABB fan motor type is available for motor sizes 280 and above. It is suited for environments where IP 65 is the required IP class or where the input voltage must be other than 360 – 420 V (50 Hz).

The values here are given for 400 V, but technical data for other voltages can be found in MotSize.

The centrifugal impeller used in the fan is a Ziehl-Abegg impeller.This type of cooling can be ordered with variant code 514.

Special motor and fan on top, N-end, for motor sizes 280 - 450

Main motor	Fan motor type	Voltage V at 50 Hz	Power kW	Current A
M3BP 280 - 315	M3BP 80 MD 4 B34	400	0.75	1.83
M3BP 355	M3BP 90 SLD 4 B34	400	1.5	3.0
M3BP 400	M3BP 100 LD 4 B34	400	3.0	6.3
M3BP 450	M3BP 112 MB 4 B34	400	4.0	8.2

Accessories

Silencer for motor sizes 280 - 450

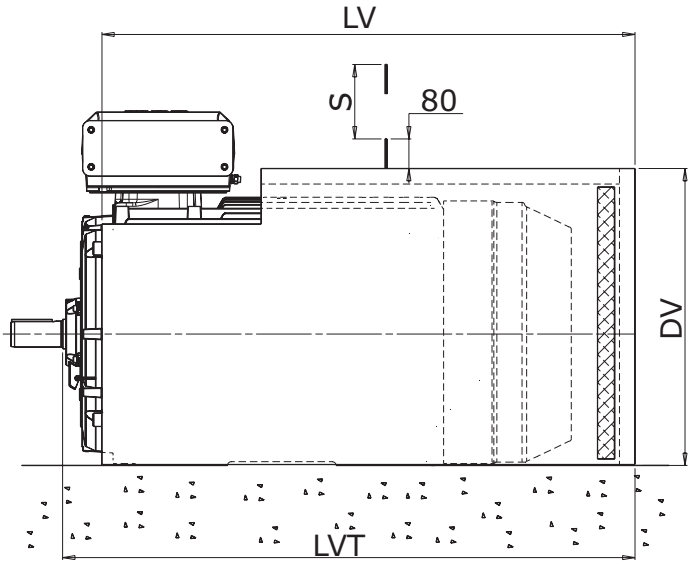

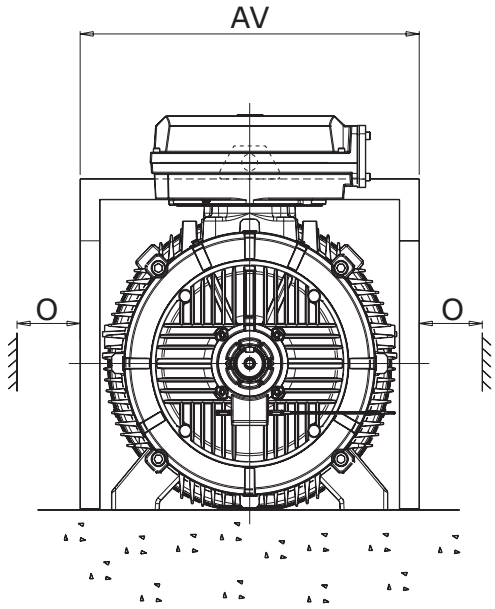

Both foot-mounted and flange-mounted motors can be fitted with a silencer to reduce noise level by about 5 - 6 dB(A). The silencer is painted blue and made of 2 mm steel sheet. The sound absorbing material is 40 mm thick polyurethane foam. On the rim there is a rubber strip for sealing on the floor. The silencer fits loosely over the motor.

The variant code for ordering a silencer is 055.

Motor size	AV	LV	LVT	DV	O[1)]	S[2)]	Weight kg
280 SM_	681	1010	1090	616	50	762	38
315 SM_	760	1094	1191	697	60	852	47
315 ML_	760	1205	1302	697	60	852	51
315 LK_	760	1411	1508	697	60	852	58
355 SM_	850	1335	1441	777	65	958	62
355 ML_	850	1440	1546	777	65	958	67
355 LK_	850	1690	1796	777	65	958	77
400 L_	938	1750	1873	866	75	1045	88
400 LK_	938	1750	1873	866	75	1045	88
450 L_	1050	2110	2230	990	80	1045	120

[1)] Clearance for motor cooling.
[2)] Clearance for removal of silencer.
Note: The dimensions are only valid for standard foot-mounted motors.

Accessories

Slide rails for motor sizes 160 - 250

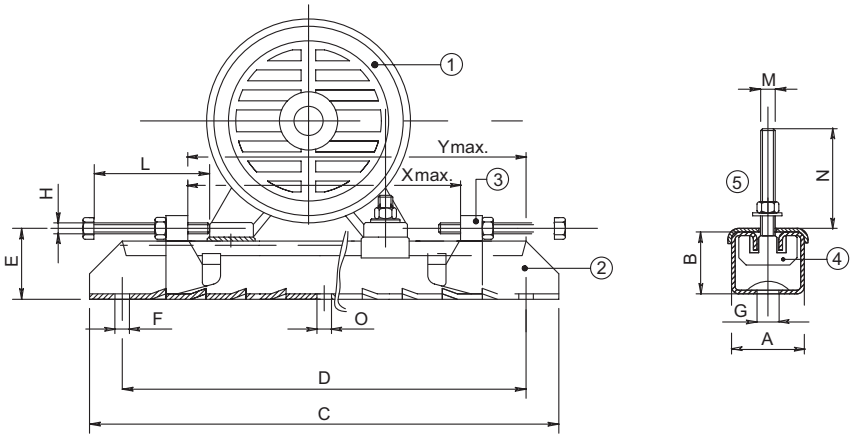

1 Motor | 2 Rail | 3 Movable adjusting bolt | 4 Fixing bolt, motor | 5 Plate

A set of slide rails includes two complete rails with screws for mounting the motor on the rails. Screws for mounting the rails on the foundation are not included.Slide rails have unmachined lower surfaces and should, before tightening down, be supporter in a suitable manner. Slide rails can be ordered with article numbers shown in the table.

		Article no.															Weight/
Motor size	**Type**	**3GZV103001-**	**A**	**B**	**C**	**D**	**E**	**F**	**G**	**H**	**L**	**M**	**N**	**O**	**Xmax**	**Ymax**	**rail kg**
Frame sizes 71 to 132 on request																	
160 - 180	TT180/12	-14	75	42	700	630	57	17	26	M12	120	M12	50	-	520	580	12.0
200 - 225	TT225/16	-15	82	50	864	800	68	17	27	M16	140	M16	65	17	670	740	20.4
250	TT280/20	-16	116	70	1072	1000	90	20	27	M18	150	M20	80	20	870	940	43.0

Accessories

Slide rails for motor sizes 280 - 400

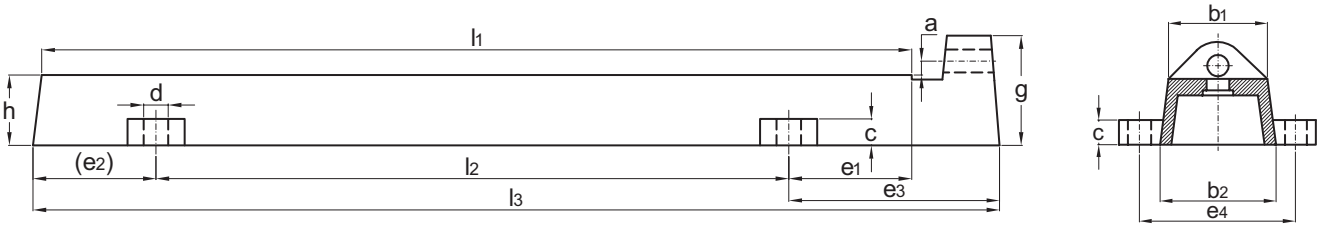

Slide rails for motor sizes 280 - 315.

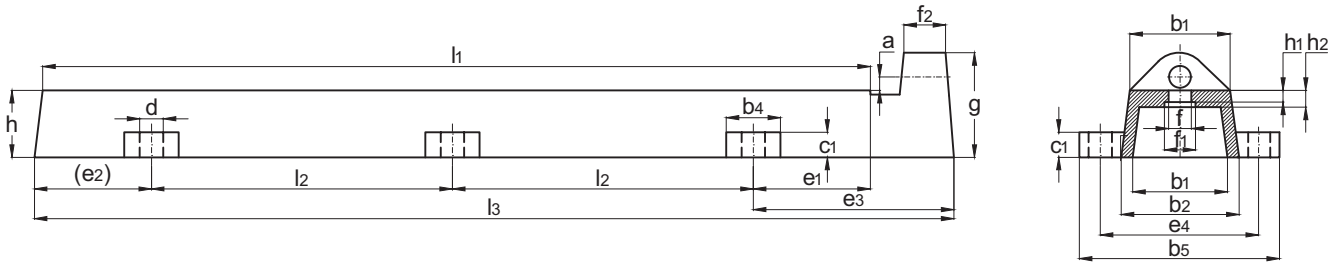

Slide rails for motor sizes 355 - 400.

Note: Slide rails that do not fulfill the DIN standard are available for motor size 450 on request.

A set of slide rails includes two complete rails with screws for mounting the motor on the rails. Screws for mounting the rails on the foundation are not included. Slide rails have unmachined lower surfaces and should be supported in a suitable manner before tightening down.
Slide rails can be ordered with article numbers shown in the table.

Motor															Bolts	Horizontal	Weight
size	Article no.	l1	l2	l3	a	h	b1	b2	c	d	e1	e2	e3	e4	to feet	bolts	kg/2 pc
280	3GZF334730-55	800	600	900	16	75	100	120	35	28	100	100	200	165	M20x90	M24x300	50
315	3GZF334730-56	1000	720	1100	16	80	120	140	40	28	140	140	240	190	M24x100	M24x300	80
355 - 400	3GZF334730-57	1250	485	1350	16	80	120	140	35	28	140	140	240	190	M24x100	M24x300	90

Motors in brief

Cast iron motors, sizes 71 - 132

Motor size		71	80	90	100	112	132
Stator and end shields	Material	Cast iron					
	Paint color shade	Munsell blue 8B 4.5/3.25					
	Corrosion class	C3 (medium)					
Feet		Integrated cast iron feet					
Bearings	D-end	6203-2Z/C3	6204-2Z/C3	6205-2Z/C3	6206-2Z/C3	6206-2Z/C	6208-2Z/C3
	N-end	6202-2Z/C3	6203-2Z/C3	6204-2Z/C3	6205-2Z/C3	6205-2Z/C3 *)	6208-2Z/C3
Axially locked bearings		Locked at D-end					
Bearing seals	D-end	V-ring					
	N-end	Labyrinth seal in IE2, V-ring in IE3					
Lubrication		Permanently lubricated shielded bearings					
Measuring nipples for condition monitoring of the bearings		Not included					
Rating plate	Material	Stainless steel					
Terminal box	Frame and cover	Cast iron					
	Corrosion class	C3 (medium)					
	Cover screws	Zinc-electroplated steel					
Connections	Threaded openings	2xM16	2xM25	2xM32			
	Terminals	6 terminals for connection with cable lugs (not included)					
	Cable glands	Cable flange included, glands as option					
Fan	Material	Glass-fiber reinforced polypropylene					
Fan cover	Material	Steel					
	Paint color shade	Munsell blue 8B 4.5/3.25					
	Corrosion class	C3 (medium)					
Stator winding	Material	Copper					
	Insulation	Insulation class F. Temperature rise class B unless otherwise stated.					
	Winding protection	3 PTC thermistors, 150 °C					
Rotor winding	Material	Pressure die-cast aluminum					
Balancing method		Half-key balancing as standard					
Keyway		Closed keyway					
Drain holes		Drain holes with closable plastic plugs, open on delivery					
Enclosure		IP 55					
Cooling method		IC 411					

*) 6206-2Z/C3 in IE3

Motors in brief

Cast iron motors, sizes 160 - 250

Motor size		160	180	200	225	250
Stator and end shields	Material	Cast iron				
	Paint color shade	Munsell blue 8B 4.5/3.25				
	Corrosion class	C3 (medium)				
Feet	Material	Integrated cast iron feet, bolted feet when terminal box on LHS/RHS				
Bearings	D-end	6309/C3	6310/C3	6312/C3	6313/C3	6315/C3
	N-end	6209/C3	6209/C3	6210/C3	6212/C3	6213/C3
Axially locked bearings		Locked at D-end				
Bearing seals	D-end	Gamma-ring				
	N-end	Gamma-ring				
Lubrication		Regreasable bearings, regreasing nipples M6x1				
Measuring nipples for condition monitoring of the bearings		Included				
Rating plate	Material	Stainless steel				
Terminal box	Frame and cover	Cast iron				
	Corrosion class	C3 (medium)				
	Cover screws	Zinc-electroplated steel				
Connections	Cable entries	2xM40, 2xM20		2xM63, 2xM20		
	Terminals	6 terminals for connection with cable lugs (not included)				
	Cable glands	Cable flange included, glands as option				
Fan	Material	Glass-fiber reinforced polypropylene				
Fan cover	Material	Steel				
	Paint color shade	Munsell blue 8B 4.5/3.25				
	Corrosion class	C3 (medium)				
Stator winding	Material	Copper				
	Insulation	Insulation class F. Temperature rise class B unless otherwise stated.				
	Winding protection	3 PTC thermistors, 150 °C				
Rotor winding	Material	Pressure die-cast aluminum				
Balancing method		Half-key balancing as standard				
Keyway		Closed keyway				
Drain holes		Drain holes with closable plastic plugs, open on delivery				
Enclosure		IP 55				
Cooling method		IC 411				

Motors in brief

Cast iron motors, sizes 280 - 450

Motor size			280	315	355	400	450
Stator and end shields	Material		Cast iron				
	Paint color shade		Munsell blue 8B 4.5/3.25				
	Corrosion class		C3 (medium)				
Feet	Material		Integrated cast iron feet				
Bearings	D-end	2-pole	6316/C3	6316/C3	6316M/C3	6317M/C3	6317M/C3
		4-12-pole	6316/C3	6319/C3	6322/C3	6324/C3	6326M/C3
	N-end	2-pole	6316/C3	6316/C3	6316M/C3	6317M/C3	6317M/C3
		4-12-pole	6316/C3	6316/C3	6316/C3	6319/C3	6322/C3
Axially locked bearings			Locked at D-end				
Bearing seals	D-end		V-ring or labyrinth seal				
	N-end		V-ring or labyrinth seal				
Lubrication			Regreasable bearings, regreasing nipples M10x1				
Measuring nipples for condition monitoring of the bearings			Included				
Rating plate	Material		Stainless steel				
Terminal box	Frame and cover		Cast iron				Cover steel
	Corrosion class		C3 (medium)				Steel
	Cover screws		Zinc-electroplated steel				
Connections	Cable-entries	2-4-pole	2xM63+2xM20	2xM63, 2xØ48-60+2xM20	2xØ48-60, 60-80, 2xM20	2xØ60-80 (2-6-pole), 2xM2+0	2xØ60-80, 2xM20
		6-8-pole			2xØ32-49, 48-60, 2M20	2xØ48-60 (8-pole), 2xM20	
				See section Standard terminal box for detailed information.			
	Terminals		6 terminals for connection with cable lugs (not included)				
	Cable glands		Cable flange, glands as option				
Fan	Material		Glass-fiber reinforced polypropylene				
Fan cover	Material		Steel				
	Paint color shade		Munsell blue 8B 4.5/3.25				
	Corrosion class		C3 (medium)				
Stator winding	Material		Copper				
	Insulation		Insulation class F. Temperature rise class B unless otherwise stated.				
	Winding protection		3 PTC thermistors, 155 °C				
Rotor winding	Material		Pressure die-cast aluminum				
Balancing method			Half-key balancing				
Keyway			Open keyway				
Drain holes			Drain holes with closable plastic plugs, open on delivery				
Enclosure			IP 55				
Cooling method			IC 411				

Motor construction

Exploded view, frame size 315

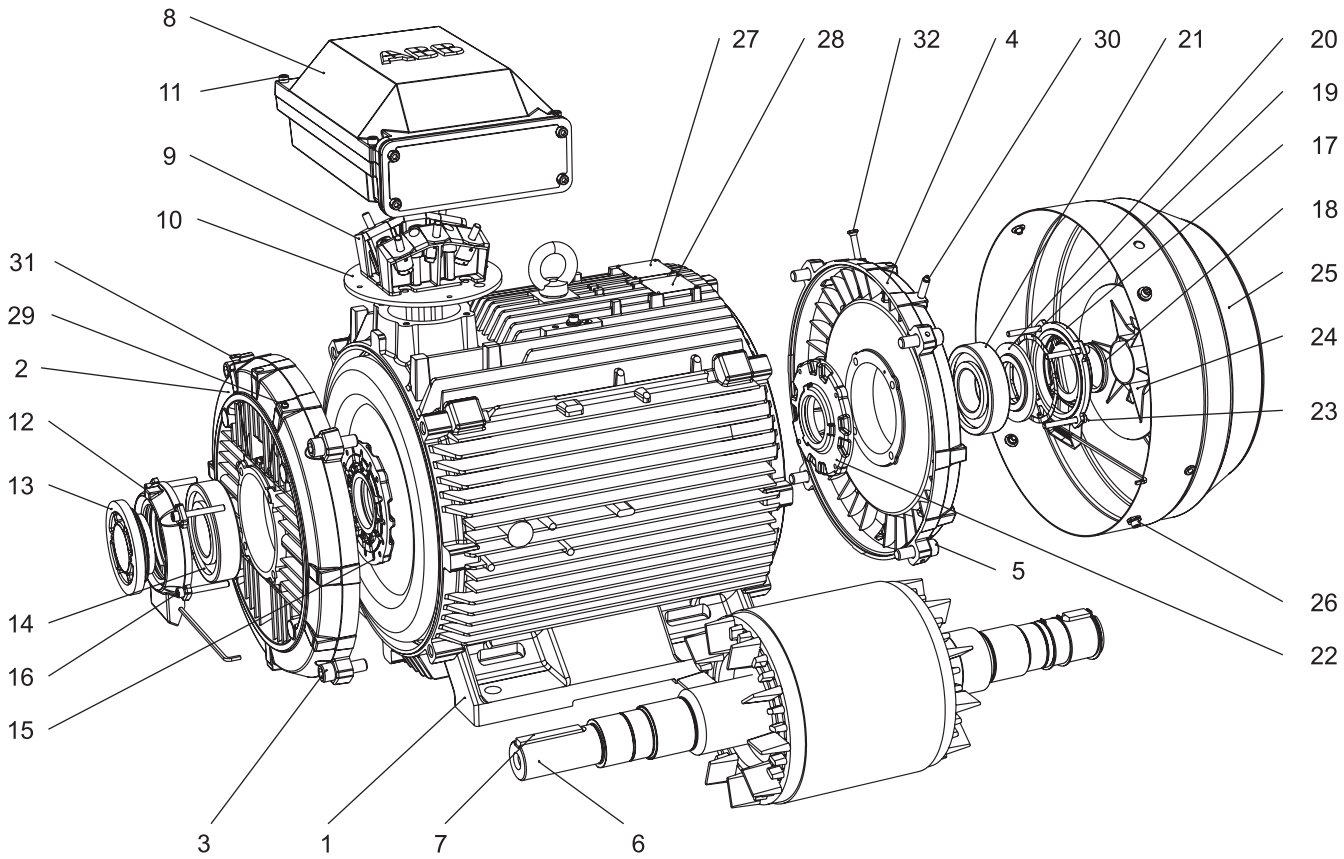

1 Stator frame
2 End shield, D-end
3 Screws for end shield, D-end
4 End shield, N-end
5 Screws for end shield, N-end
6 Rotor with shaft
7 Key, D-end
8 Terminal box
9 Terminal board
10 Intermediate flange
11 Screws for terminal box cover
12 Outer bearing cover, D-end
13 Valve disc with labyrinth seal, D-end; standard in 2-pole motors, V-ring in 4-8 pole motors
14 Bearing, D-end
15 Inner bearing cover, D-end
16 Screws for bearing cover
17 Outer bearing cover, N-end
18 Seal, N-end
19 Wave spring
20 Valve disc, N-end
21 Bearing, N-end
22 Inner bearing cover, N-end
23 Screws for bearing cover
24 Fan
25 Fan cover
26 Screws for fan cover
27 Rating plate
28 Lubrication plate
29 Grease nipple, D-end
30 Grease nipple, N-end
31 SPM nipple, D-end
32 SPM nipple, N-end

Low voltage Process performance aluminum motors

98	**Ordering information**
99	**Rating plates**
100	**Technical data IE2**
100	400 V, 50 Hz
105	460V, 60Hz
109	**Technical data IE3**
109	400 V, 50 Hz
116	460V, 60Hz
119	**Variant codes**
124	**Mechanical design**
124	Motor frame and drain holes
125	Bearings
135	Terminal box
138	**Dimension drawings**
138	Motor sizes 63 - 280
139	Motor sizes 80 - 280
140	Motor sizes 80 - 250
141	**Accessories**
141	Slide rails
142	**Aluminum motors in brief**
142	Motor sizes 63 - 132
143	Motor sizes 160 - 280

Ordering information

Explanation of the product code

Motor type	Motor size	Product code	Code for mounting arrangement, Voltage and frequency code, Generation code followed by variant codes
M3AA	112MB	3GAA 111	320 - ADE, 122, 003 etc.
		1 2 3 4 5 6 7	8 9 10 11 12 13 14...

Positions 1 to 4	
3GAA:	Totally enclosed motor with aluminum stator frame

Positions 5 and 6			
IEC size		IEC size	
06:	63	16:	160
07:	71	18:	180
08:	80	20:	200
09:	90	22:	225
10:	100	25:	250
11:	112	28:	280
13:	132		

Position 7	
Pole pairs	
1:	2 poles
2:	4 poles
3:	6 poles
4:	8 poles
5:	10 poles
6:	12 poles
7:	> 12 poles
8:	Two-speed motors
9:	Multi-speed motors

Positions 8 to 10
Running number

Position 11
- (dash)

Position 11
- (dash)

Position 12 (marked with black dot in data tables)	
Mounting arrangement	
A:	Foot-mounted motor
B:	Flange-mounted motor. Large flange with clearance holes.
C:	Flange-mounted motor. Small flange with tapped holes.
F:	Foot- and flange-mounted motor. Special flange.

Position 12 (marked with black dot in data tables)	
H:	Foot- and flange-mounted motor. Large flange with clearance holes.
J:	Foot- and flange-mounted motor. Small flange with tapped holes.
N:	Flange-mounted (CI ring flange FF)
P:	Foot-and flange-mounted motor (CI ring flange FF)
V:	Flange-mounted motor. Special flange.

Position 13 (marked with black dot in data tables)	
Voltage and frequency code	
Single-speed motors	
B:	380 VΔ 50 Hz
D:	400 VΔ, 415 VΔ, 690 VY 50 Hz
E:	500 VΔ 50 Hz
F:	500 VY 50 Hz
S:	230 VΔ, 400 VY, 415 VY 50 Hz
T:	660 VΔ 50 Hz
U:	690 VΔ 50 Hz
X:	Other rated voltage, connection or frequency, 690 V maximum
Two-speed motors	
A:	220 V 50 Hz
B:	380 V 50 Hz
D:	400 V 50 Hz
E:	500 V 50 Hz
S:	230 V 50 Hz
X:	Other rated voltage, connection or frequency, 690 V maximum
Remark:	For voltage code X the variant code “209 Non-standard voltage or frequency (special winding)” must be ordered.

Position 14
Version
A, B, C...: Generation code followed by variant codes

Efficiency values are given according to IEC 60034-2-1; 2014

For detailed dimension drawings please see our web-pages ‘www.abb.com/motors&generators’ or contact ABB.

Rating plates

—
01 Motor sizes 71 to 80.

02 Motor sizes 90 to 132.

03 Motor sizes 160 to 280.

The motor's main rating plate shows the motor's performance values with various connections at nominal speed. The rating plate also shows the efficiency level (IE2, IE3, or IE4), year of manufacture, and the lowest nominal efficiency at 100, 75, and 50 % nominal load. The material of the rating plate is aluminum as standard.

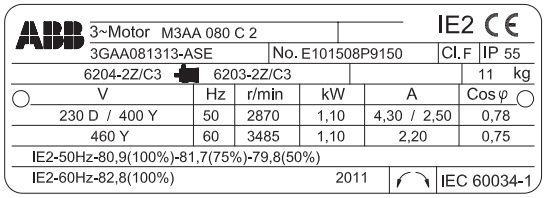

—
01

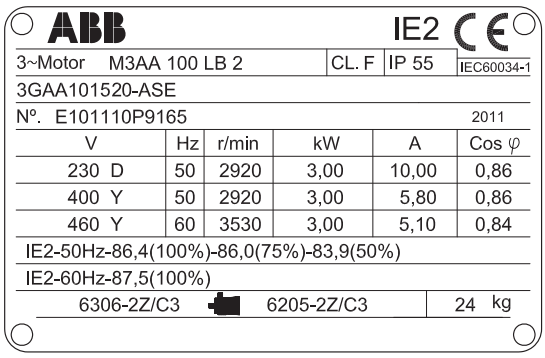

—
02

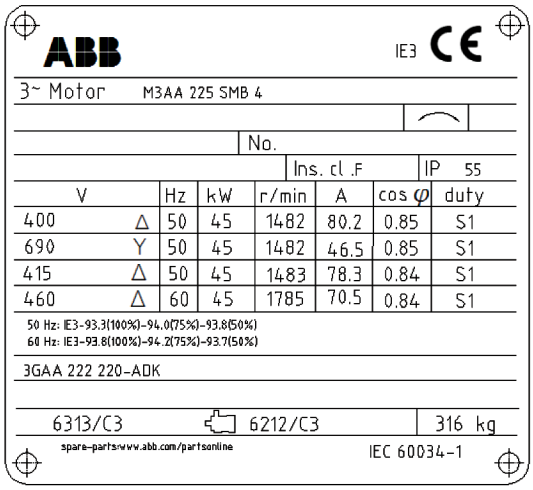

—
03

Technical data, 400 V 50 Hz

IE2 Process performance aluminum motors

IP 55 - IC 411 - Insulation class F, temperature rise class B
IE2 efficiency class according to IEC 60034-30-1; 2014

Output kW	Motor type	Product code	Speed r/min	Efficiency IEC 60034-30-1; 2014 Full load 100%	3/4 load 75%	1/2 load 50%	Power factor Cosφ	Current I_N A	I_s/I_N	Torque T_N Nm	T_l/T_N	T_b/T_N	Moment of inertia J = 1/4 GD²kgm²	Weight kg	Sound pressure Level L_{PA} dB
3000 r/min = 2 poles				**400 V 50 Hz**				**CENELEC-design**							
0.18	M3AA 63A 2	3GAA061311-••E	2790	67,3	65,1	58,2	0,75	0,51	4,5	0,61	2,4	2,6	0,00015	4	60
0.25	M3AA 63B 2	3GAA061312-••E	2790	71,4	70,1	64,7	0,76	0,66	4,8	0,86	2,8	2,7	0,00017	4,2	61
0.37	M3AA 71A 2	3GAA071311-••E	2800	73,8	75,8	73,9	0,76	0,95	4,9	1,26	2,7	2,7	0,00035	4,9	58
0.55	M3AA 71B 2	3GAA071312-••E	2790	78,4	79,8	78,7	0,78	1,29	5,3	1,88	2,9	2,8	0,00045	5,9	58
0.75	M3AA 80B 2	3GAA081312-••E	2895	80,6	80,4	77,3	0,79	1,7	8,1	2,4	3,7	3,9	0,0009	10,5	60
1.1	M3AA 80C 2	3GAA081313-••E	2875	80,6	80,4	77,9	0,8	2,4	7,8	3,6	3,6	3,5	0,0012	11	60
1.5	M3AA 90L 2	3GAA091500-••E	2900	84,1	85	83,5	0,86	2,9	7,6	4,9	2,5	3,3	0,0024	16	60
2.2	M3AA 90LB 2	3GAA091520-••E	2870	84,6	85,7	84,9	0,86	4,4	6,9	7,3	2,8	3,2	0,0027	18	63
3	M3AA 100LB 2	3GAA101520-••E	2920	86,4	86,1	84	0,86	5,8	9,3	9,8	3,3	3,9	0,005	25	62
4	M3AA 112MB 2	3GAA111320-••E	2885	86,1	87	88	0,88	7,6	7,6	13,2	2,5	2,8	0,0062	30	68
5.5	M3AA 132SB 2	3GAA131120-••E	2915	88	88,2	86,9	0,82	11	7,9	18	2,6	3,6	0,016	52	73
7.5	M3AA 132SC 2	3GAA131130-••E	2915	88,5	89,2	88,6	0,88	13,6	7,6	24,5	2,2	3,2	0,022	52	73
11	M3AA 160MLA 2	3GAA161410-••G	2938	90,6	91,5	91,1	0,9	19,2	7,5	35,7	2,4	3,1	0,044	91	69
15	M3AA 160MLB 2	3GAA161420-••G	2934	91,5	92,5	92,2	0,9	26	7,5	48,8	2,5	3,3	0,053	105	69
18.5	M3AA 160MLC 2	3GAA161430-••G	2932	92	93,1	93,1	0,92	31,5	7,5	60,2	2,9	3,4	0,063	123	69
22	M3AA 180MLA 2	3GAA181410-••G	2952	92,2	92,8	92,2	0,87	39,5	7,7	71,1	2,8	3,3	0,076	132	69
30	M3AA 200MLA 2	3GAA201410-••G	2956	93,1	93,5	92,8	0,9	51,4	7,7	96,9	2,7	3,1	0,178	210	72
37	M3AA 200MLB 2	3GAA201420-••G	2959	93,4	93,7	92,9	0,9	63,5	8,2	119	3	3,3	0,196	225	72
45	M3AA 225SMA 2	3GAA221210-••G	2961	93,6	93,9	93,1	0,88	78,8	6,7	145	2,5	2,5	0,244	263	74
55	M3AA 250SMA 2	3GAA251210-••G	2967	94,1	94,4	93,8	0,88	95,8	6,8	177	2,2	2,7	0,507	304	75
75	M3AA 280SMA 2	3GAA281210-••G	2968	94,4	94,7	94,2	0,89	128	7,1	241	2,5	2,8	0,583	389	75
90 [1]	M3AA 280SMB 2	3GAA281220-••G	2971	94,9	95,2	94,7	0,89	153	7,8	289	2,6	3,2	0,644	425	75

[1] Temperature rise class F

Output kW		Motor type	Product code	Speed r/min	Efficiency IEC 60034-30-1; 2014 Full load 100%	3/4 load 75%	1/2 load 50%	Power factor Cosφ	Current I_N A	I_S/I_N	Torque T_N Nm	T_l/T_N	T_b/T_N	Moment of inertia J = 1/4 GD²kgm²	Weight kg	Sound pressure Level L_{PA} dB
3000 r/min = 2 poles					**400 V 50 Hz**				**High-output design**							
11		M3AA 132SMF 2	3GAA131260-••E	2900	90,3	90,5	89,4	0,87	20,2	8,5	36,2	2,7	3,7	0,0186	77	68
15		M3AA 132SMG 2	3GAA131270-••E	2905	90,4	90,8	90	0,84	28,5	9,1	49,3	3,3	4	0,02	81	69
18.5		M3AA 132SMJ 2	3GAA131290-••E	2895	91,1	92	92,1	0,89	32,9	9,7	61	3,2	4,3	0,0256	93	68
22		M3AA 160MLD 2	3GAA161440-••G	2933	91,7	92,8	92,8	0,9	38	8,1	71,6	3,2	3,6	0,063	123	69
27		M3AA 160MLE 2	3GAA161450-••G	2939	92,2	93,1	93,1	0,9	46,4	8,8	87,7	3,4	3,8	0,072	145	69
30		M3AA 180MLB 2	3GAA181420-••G	2950	92,7	93,5	93,3	0,88	53	7,9	97,1	2,8	3,3	0,092	149	69
45		M3AA 200MLC 2	3GAA201430-••G	2957	93,3	93,8	93,2	0,9	78,2	8,1	145	3,1	3,3	0,196	225	72
55	[1]	M3AA 200MLD 2	3GAA201440-••G	2953	93,8	94,4	94,3	0,89	95	7,8	177	2,9	3,3	0,217	241	72
55		M3AA 225SMB 2	3GAA221220-••G	2961	93,9	94,3	93,6	0,88	96	6,5	177	2,4	2,5	0,274	286	74
75	[1]	M3AA 225SMC 2	3GAA221230-••G	2969	94,4	94,6	94	0,84	136	7,4	241	3,2	3,1	0,309	312	74
75	[1]	M3AA 225SMD 2	3GAA221240-••G	2967	94,4	94,6	94	0,87	131	7,7	241	3,2	3	0,329	317	74
75		M3AA 250SMB 2	3GAA251220-••G	2970	94,5	94,8	94,3	0,89	128	7,6	241	2,8	3,1	0,583	351	75
80	[1]	M3AA 225SMD 2	3GAA221240-••G	2964	94,4	94,8	94,3	0,87	140	7,3	257	3	2,8	0,329	317	74
90	[1]	M3AA 250SMC 2	3GAA251230-••G	2971	95	95,3	94,9	0,89	153	7,6	289	2,5	3,1	0,644	386	75

[1] Temperature rise class F

Technical data, 400 V 50 Hz

IE2 Process performance aluminum motors

IP 55 - IC 411 - Insulation class F, temperature rise class B
IE2 efficiency class according to IEC 60034-30-1; 2014

Output kW	Motor type	Product code	Speed r/min	Efficiency IEC 60034-30-1; 2014 Full load 100%	3/4 load 75%	1/2 load 50%	Power factor Cosφ	Current I_N A	I_s/I_N	Torque T_N Nm	T_i/T_N	T_b/T_N	Moment of inertia J = 1/4 GD²kgm²	Weight kg	Sound pressure Level L_{PA} dB
1500 r/min = 4 poles				**400 V 50 Hz**				**CENELEC-design**							
0.12	M3AA 63A 4	3GAA062311-••E	1360	55	51,3	43	0,64	0,49	3,2	0,84	2,4	2,5	0,00027	3,7	51
0.18	M3AA 63B 4	3GAA062312-••E	1370	63,5	61	54,3	0,61	0,67	3,7	1,25	2,8	2,9	0,00034	4,2	54
0.25	M3AA 71A 4	3GAA072311-••E	1365	65,1	66	62,7	0,76	0,72	4	1,74	2	2,1	0,00066	5,2	45
0.37	M3AA 71B 4	3GAA072312-••E	1375	69,7	71,9	71,1	0,79	0,96	3,8	2,5	2	2,2	0,0008	5,9	45
0.55	M3AA 80A 4	3GAA082311-••E	1375	72,8	76,1	75,2	0,77	1,41	4,5	3,8	1,8	2,2	0,0013	8,5	50
0.75	M3AA 80E 4	3GAA082315-••E	1425	79,8	80,4	77,9	0,72	1,88	6,6	5	3,5	3,6	0,002	15	54
1.1	M3AA 90LB 4	3GAA092520-••E	1435	83,7	83,7	81,7	0,78	2,4	6,6	7,3	2,9	3,2	0,0043	16	50
1.5	M3AA 90LD 4	3GAA092540-••E	1435	84,2	84,1	81,9	0,76	3,3	7	9,9	3,1	3,5	0,0048	17	50
2.2	M3AA 100LC 4	3GAA102530-••E	1450	86,4	86,2	84,1	0,79	4,6	7,3	14,4	2,8	3,4	0,009	25	54
3	M3AA 100LD 4	3GAA102540-••E	1445	85,7	86,1	85,1	0,79	6,3	7	19,8	2,4	3	0,011	28	63
4	M3AA 112MB 4	3GAA112320-••E	1445	86,7	86,5	85,2	0,75	8,8	7,3	26,4	3,1	3,4	0,0126	34	64
5.5	M3AA 132M 4	3GAA132300-••E	1465	89	89,5	88,6	0,79	10,9	6,3	36	1,9	2,6	0,038	48	66
7.5	M3AA 132MA 4	3GAA132310-••E	1460	88,7	89,4	88,9	0,79	14,7	6,4	49	1,8	2,6	0,048	59	63
11	M3AA 160MLA 4	3GAA162410-••G	1466	90,4	91,6	91,4	0,84	20,9	6,8	71,6	2,2	2,8	0,081	99	62
15	M3AA 160MLB 4	3GAA162420-••G	1470	91,4	92,4	92,2	0,83	28,5	7,1	97,4	2,6	3	0,099	118	62
18.5	M3AA 180MLA 4	3GAA182410-••G	1477	91,9	92,9	92,7	0,84	34,5	7,2	119	2,6	2,9	0,166	146	62
22	M3AA 180MLB 4	3GAA182420-••G	1475	92,3	93,3	93,2	0,84	40,9	7,3	142	2,6	3	0,195	163	62
30	M3AA 200MLA 4	3GAA202410-••G	1480	93,2	94	93,7	0,84	55,2	7,4	193	2,8	3	0,309	218	63
37	M3AA 225SMA 4	3GAA222210-••G	1479	93,4	93,9	93,4	0,84	68	7,1	238	2,6	2,9	0,356	240	66
45	M3AA 225SMB 4	3GAA222220-••G	1480	93,9	94,3	93,9	0,85	81,3	7,5	290	2,8	3,2	0,44	273	66
55	M3AA 250SMA 4	3GAA252210-••G	1480	94,4	94,9	94,6	0,85	98,9	7	354	2,6	2,9	0,765	314	67
75	M3AA 280SMA 4	3GAA282210-••G	1478	94,3	94,9	94,6	0,85	135	7,1	484	2,8	3	0,866	389	67
85	M3AA 280SMB 4	3GAA282220-••G	1480	94,8	95,3	95	0,84	153	8	548	3,4	3,6	0,941	418	67
90 [1]	M3AA 280SMB 4	3GAA282220-••G	1478	94,6	95,4	95,2	0,84	163	7,7	581	3,2	3,4	0,941	418	67

[1] Temperature rise class F

Output kW	Motor type	Product code	Speed r/min	Efficiency IEC 60034-30-1; 2014 Full load 100%	3/4 load 75%	1/2 load 50%	Power factor Cosφ	Current I_N A	I_s/I_N	Torque T_N Nm	T_i/T_N	T_b/T_N	Moment of inertia J = 1/4 GD²kgm²	Weight kg	Sound pressure Level L_{PA} dB
1500 r/min = 4 poles				**400 V 50 Hz**				**High-output design**							
11	M3AA 132SMF 4	3GAA132260-••E	1460	90,4	90,8	89,9	0,79	21,5	7,7	71,9	2,1	3,1	0,0433	83	65
15	M3AA 132SMH 4	3GAA132280-••E	1455	90,6	91	90,3	0,77	29,8	7,1	98,4	2,4	2,9	0,0517	82	67
18.5	M3AA 160MLC 4	3GAA162430-••G	1469	91,4	92,5	92,3	0,84	34,7	7,6	120	3	3,2	0,11	127	62
22 [1]	M3AA 160MLD 4	3GAA162440-••G	1464	91,6	92,6	92,7	0,85	41,3	6,9	143	2,5	2,9	0,125	140	62
30 [1]	M3AA 180MLC 4	3GAA182430-••G	1474	92,3	93,5	93,5	0,83	56,5	7,3	194	2,7	2,9	0,217	177	62
37	M3AA 200MLB 4	3GAA202420-••G	1479	93,4	94,4	94,4	0,85	67,2	7,1	238	2,6	2,9	0,343	234	63
45 [1]	M3AA 200MLC 4	3GAA202430-••G	1479	93,6	94,4	94,2	0,83	83,6	7,5	290	2,9	3,2	0,366	246	63
55	M3AA 225SMC 4	3GAA222230-••G	1478	94	94,7	94,5	0,85	99,3	7,4	355	2,9	3,1	0,474	287	66
64	M3AA 225SMD 4	3GAA222240-••G	1480	94,2	94,6	94,1	0,85	115	8,2	412	3,3	3,3	0,542	314	66
75 [1]	M3AA 250SMB 4	3GAA252220-••G	1478	94,4	95,1	94,8	0,85	134	7,3	484	2,8	3,1	0,866	350	67
90 [1]	M3AA 250SMC 4	3GAA252230-••G	1478	94,6	95,3	95	0,84	163	7,4	581	3,1	3,3	0,941	377	67

[1] Temperature rise class F

Technical data, 400 V 50 Hz

IE2 Process performance aluminum motors

IP 55 - IC 411 - Insulation class F, temperature rise class B
IE2 efficiency class according to IEC 60034-30-1; 2014

Output kW	Motor type	Product code	Speed r/min	Efficiency IEC 60034-30-1; 2014 Full load 100%	3/4 load 75%	1/2 load 50%	Power factor Cosφ	Current I_N A	I_s/I_N	Torque T_N Nm	T_l/T_N	T_b/T_N	Moment of inertia J = 1/4 GD²kgm²	Weight kg	Sound pressure Level L_{PA} dB
1000 r/min = 6 poles				**400 V 50 Hz**				**CENELEC-design**							
0.09	M3AA 63A 6	3GAA063311-••E	890	50,7	48,5	42	0,62	0,41	2,8	0,96	2	2,2	0,00042	4,2	48
0.12	M3AA 63B 6	3GAA063312-••E	890	52,3	48,8	41,5	0,6	0,55	3	1,29	2,2	2,4	0,00052	4,5	53
0.18	M3AA 71A 6	3GAA073311-••E	885	59,5	61,1	56,5	0,71	0,61	3,1	1,94	1,7	1,9	0,00092	5,5	42
0.25	M3AA 71B 6	3GAA073312-••E	895	64	63,6	59,5	0,71	0,79	3,3	2,6	2,2	2,2	0,0012	6,5	42
0.37	M3AA 80A 6	3GAA083311-••E	905	68	70,7	68,3	0,73	1,07	3,6	3,9	1,6	2,1	0,002	9	47
0.55	M3AA 80B 6	3GAA083312-••E	905	68,7	71,8	69,7	0,73	1,58	3,3	5,8	1,6	1,8	0,0026	10	47
0.75	M3AA 90LB 6	3GAA093520-••E	930	77,6	78	75,6	0,71	1,96	4	7,7	2	2,3	0,0048	18	44
1.1	M3AA 90LD 6	3GAA093540-••E	935	78,2	79,2	77,5	0,66	2,94	4,2	11,2	2,2	2,6	0,0056	20	44
1.5	M3AA 100LC 6	3GAA103530-••E	945	80,3	81,4	80,7	0,73	3,6	3,9	15,1	1,7	2	0,009	26	49
2.2	M3AA 112MB 6	3GAA113320-••E	955	81,9	81,8	79,2	0,72	5,3	5,2	21,9	1,8	2,2	0,01	34	56
3	M3AA 132S 6	3GAA133100-••E	960	83,3	82,9	80,5	0,65	7,69	4,3	29,8	1,6	2,3	0,031	46	57
4	M3AA 132MB 6	3GAA133320-••E	975	86,4	85,8	83,1	0,7	9,4	7,3	39,2	2,1	4,4	0,045	54	57
5.5	M3AA 132MC 6	3GAA133330-••E	965	86,1	85,6	83	0,67	13,3	6,2	54,3	2,5	2,8	0,049	59	61
7.5	M3AA 160MLA 6	3GAA163410-••G	975	88,5	89,8	89,7	0,79	15,4	7,4	73,4	1,7	3,2	0,087	98	59
11	M3AA 160MLB 6	3GAA163420-••G	972	89,3	90,6	90,5	0,79	22,5	7,5	108	1,9	2,9	0,114	125	59
15	M3AA 180MLA 6	3GAA183410-••G	977	90,5	91,5	91	0,77	31	5,8	146	1,8	2,7	0,168	148	59
18.5	M3AA 200MLA 6	3GAA203410-••G	988	91,6	92,3	91,7	0,8	36,4	6,7	178	2,3	2,9	0,382	196	63
22	M3AA 200MLB 6	3GAA203420-••G	987	92	92,9	92,8	0,82	42	6,6	212	2,2	2,8	0,448	218	63
30	M3AA 225SMA 6	3GAA223210-••G	986	92,6	93,3	92,8	0,83	56,2	7	290	2,6	2,9	0,663	266	63
37	M3AA 250SMA 6	3GAA253210-••G	989	93,1	93,8	93,4	0,82	69,9	6,8	357	2,4	2,7	1,13	294	63
45 [1]	M3AA 280SMA 6	3GAA283210-••G	988	93,2	94	93,9	0,84	82,9	6,8	434	2,4	2,6	1,37	378	63
55 [1]	M3AA 280SMB 6	3GAA283220-••G	988	93,2	94,1	94	0,84	101	7,1	531	2,6	2,8	1,5	404	63

[1] Temperature rise class F

Output kW	Motor type	Product code	Speed r/min	Efficiency IEC 60034-30-1; 2014 Full load 100%	3/4 load 75%	1/2 load 50%	Power factor Cosφ	Current I_N A	I_s/I_N	Torque T_N Nm	T_l/T_N	T_b/T_N	Moment of inertia J = 1/4 GD²kgm²	Weight kg	Sound pressure Level L_{PA} dB
1000 r/min = 6 poles				**400 V 50 Hz**				**High-output design**							
15	M3AA 160MLC 6	3GAA163430-••G	971	89,7	91,2	91,2	0,77	31,3	7,3	147	1,8	3,6	0,131	138	59
18.5	M3AA 180MLB 6	3GAA183420-••G	975	90,7	92	92	0,79	37,2	5,8	181	1,7	2,7	0,198	162	59
30 [1]	M3AA 200MLC 6	3GAA203430-••G	985	92	93,1	92,9	0,83	56,7	6,9	290	2,3	2,8	0,531	245	63
37	M3AA 225SMB 6	3GAA223220-••G	985	93,1	94	94	0,83	69,1	6,6	358	2,3	2,6	0,821	300	63
45 [1]	M3AA 225SMC 6	3GAA223230-••G	984	92,6	93,9	94	0,83	84,4	6,4	436	2,3	2,6	0,821	300	63
45	M3AA 250SMB 6	3GAA253220-••G	989	93,4	94,1	93,9	0,83	83,7	7	434	2,5	2,7	1,37	341	63
55 [1]	M3AA 250SMC 6	3GAA253230-••G	988	93,2	94,1	94	0,84	101	7,1	531	2,6	2,8	1,5	367	63

[1] Temperature rise class F

Technical data, 400 V 50 Hz

IE2 Process performance aluminum motors

IP 55 - IC 411 - Insulation class F, temperature rise class B
IE2 efficiency class according to IEC 60034-30-1; 2014

Output kW	Motor type	Product code	Speed r/min	Efficiency IEC 60034-30-1; 2014 Full load 100%	3/4 load 75%	1/2 load 50%	Power factor Cosφ	Current I_N A	I_s/I_N	Torque T_N Nm	T_l/T_N	T_b/T_N	Moment of inertia J = 1/4 GD²kgm²	Weight kg	Sound pressure Level L_{PA} dB
750 r/min = 8 poles				**400 V 50 Hz**				**CENELEC-design**							
0.09	M3AA 71A 8	3GAA074001-••E	675	48,8	45,2	37,8	0,57	0,46	2,5	1,27	2,2	2,1	0,00092	5,5	40
0.12	M3AA 71B 8	3GAA074002-••E	665	51,5	49	41,9	0,6	0,56	2,5	1,72	2,2	2,1	0,0012	6,5	43
0.18	M3AA 80A 8	3GAA084001-••E	690	57,2	55,4	48,8	0,61	0,74	2,9	2,4	2,3	2,3	0,0018	8,5	45
0.25	M3AA 80B 8	3GAA084002-••E	690	61,4	60	54	0,6	0,97	3,1	3,4	2,5	2,5	0,0024	9,5	50
0.37	M3AA 90S 8	3GAA094100-••E	695	59,4	55,9	47,8	0,54	1,6	2,7	5	1,7	2,1	0,0032	13	52
0.55	M3AA 90L 8	3GAA094500-••E	660	61,7	59,5	53	0,58	2,3	2,5	7,6	1,5	1,6	0,0043	16	52
0.75	M3AA 100LA 8	3GAA104510-••E	720	70,7	67,1	59,9	0,47	3,2	3,9	9,9	2,5	3,3	0,0069	20	46
1.1	M3AA 100LB 8	3GAA104520-••E	695	76	74,9	70,9	0,66	3,1	3,4	15,1	1,7	2,2	0,0082	23	53
2.2	M3AA 132S 8	3GAA134100-••E	715	77,7	79,2	77,6	0,65	6,2	3,4	29,3	1,3	1,9	0,031	46	56
3	M3AA 132M 8	3GAA134300-••E	715	79,3	78,8	75,5	0,64	8,5	3,2	40	1,2	1,8	0,037	53	58
4	M3AA 160 MLA 8	3GAA164410-••G	728	84	85,1	83,6	0,67	10,2	5,4	52,4	1,5	2,6	0,068	84	59
5.5	M3AA 160 MLB 8	3GAA164420-••G	726	84,6	85,9	84,8	0,67	13,9	5,6	72,3	1,4	2,6	0,085	98	59
7.5	M3AA 160 MLC 8	3GAA164430-••G	727	86	87,3	86,5	0,65	19,3	4,7	98,5	1,5	2,8	0,132	137	59
11	M3AA 180 MLA 8	3GAA184410-••G	731	86,9	88,5	87,9	0,67	27,3	4,4	143	1,8	2,6	0,214	175	59
15	M3AA 200 MLA 8	3GAA204410-••G	737	90,1	91,3	90,8	0,74	32,4	5,3	194	2	2,4	0,45	217	60
18.5	M3AA 225 SMA 8	3GAA224210-••G	739	91	92	91,5	0,73	40,1	5,2	239	2	2,3	0,669	266	63
22	M3AA 225 SMB 8	3GAA224220-••G	738	91,6	92,3	92	0,74	46,8	5,5	284	2	2,3	0,722	279	63
30	M3AA 250 SMA 8	3GAA254210-••G	742	92,3	92,8	92,2	0,71	66	5,8	386	2,6	2,4	1,4	340	63
37	M3AA 280 SMA 8	3GAA284210-••E	740	92,2	93	92,6	0,74	78,1	5,6	477	2,4	2,3	1,51	403	63

Output kW	Motor type	Product code	Speed r/min	Efficiency IEC 60034-30-1; 2014 Full load 100%	3/4 load 75%	1/2 load 50%	Power factor Cosφ	Current I_N A	I_s/I_N	Torque T_N Nm	T_l/T_N	T_b/T_N	Moment of inertia J = 1/4 GD²kgm²	Weight kg	Sound pressure Level L_{PA} dB
750 r/min = 8 poles				**400 V 50 Hz**				**High-output design**							
0.18	M3AA 71C 8	3GAA074003-••E	660	49,8	48,5	41,7	0,63	0,82	2,7	2,6	2,1	2	0,0015	7	40
0.37	M3AA 80C 8	3GAA084003-••E	685	63,1	63,2	58,1	0,62	1,36	3,3	5,1	2,3	2,3	0,0031	11	45
0.75 [1]	M3AA 90LF 8	3GAA094560-••E	635	58,5	57,8	51,2	0,6	3,1	2,7	10,5	1,7	2	0,0048	18	43
1.5 [1]	M3AA 100LG 8	3GAA104570-••E	685	70,7	70,9	67,3	0,64	4,7	3,1	20,9	1,9	2	0,009	26	46
3.8 [1]	M3AA 132MF 8	3GAA134360-••E	710	76,7	79,3	78,1	0,68	10,5	3,7	51,1	1,4	2,5	0,049	54	68
18.5	M3AA 200 MLB 8	3GAA204420-••E	739	90,1	90,9	90,3	0,74	40	5,4	239	2,1	2,3	0,53	245	60
30	M3AA 225 SMC 8	3GAA224230-••E	737	91,6	92,6	92,4	0,73	64,7	5,6	388	2,3	2,4	0,828	300	63
37	M3AA 250 SMB 8	3GAA254220-••E	740	92,7	93,6	93,4	0,73	78,9	5,4	477	2,6	2,3	1,51	367	63
45 [1]	M3AA 250 SMC 8	3GAA254230-••G	738	92,2	93,4	93,4	0,74	95,1	5,6	582	2,3	2,4	1,51	367	63

[1] Temperature rise class F

Technical data, 400 V 50 Hz

IE2 Process performance aluminum motors

IP 55 - IC 411 - Insulation class F, temperature rise class B
IE2 efficiency class according to IEC 60034-30-1; 2014

Output kW	Motor type	Product code	Speed r/min	Efficiency IEC 60034-30-1; 2014 Full load 100%	3/4 load 75%	1/2 load 50%	Power factor Cosφ	Current I_N A	I_s/I_N	Torque T_N Nm	T_l/T_N	T_b/T_N	Moment of inertia J = 1/4 GD²kgm²	Weight kg	Sound pressure Level L_{PA} dB
3600 r/min = 2 poles				**460 V 60 Hz**				**CENELEC-design**							
0.18	M3AA 63A 2	3GAA061311-••E	3420	69,4	66,2	58,7	0,7	0,46	5,3	0,5	3	3,4	0,00015	4	
0.25	M3AA 63B 2	3GAA061312-••E	3420	73,8	71,6	65,4	0,71	0,59	5,7	0,69	3,6	3,5	0,00017	4,2	
0.37	M3AA 71A 2	3GAA071311-••E	3400	77,5	77,5	74,3	0,71	0,84	5,9	1,03	3,2	3,5	0,00035	4,9	61
0.55	M3AA 71B 2	3GAA071312-••E	3420	81,9	82,6	80,7	0,75	1,12	6,6	1,53	3,2	3,7	0,00045	5,9	61
0.75	M3AA 80B 2	3GAA081312-••E	3505	82,5	81,4	77,5	0,8	1,43	9,6	2	3,7	4,5	0,0009	10,5	63
1.1	M3AA 80C 2	3GAA081313-••E	3490	82,6	81,9	78,7	0,78	2,1	9,1	3	3,9	4,2	0,0012	11	63
1.5	M3AA 90L 2	3GAA091500-••E	3510	85,1	85	82,9	0,84	2,6	8,4	4	2,8	3,8	0,0024	16	63
2.2	M3AA 90LB 2	3GAA091520-••E	3480	85,8	85,9	84,2	0,85	3,7	7,9	6	2,6	3,7	0,0027	18	66
3	M3AA 100LB 2	3GAA101520-••E	3530	87,5	86,7	84,5	0,84	5,1	10	8,1	4,1	4,6	0,005	25	65
4	M3AA 112MB 2	3GAA111320-••E	3490	87,6	88,4	87,8	0,91	6,2	8,1	10,9	2,7	3	0,0062	30	71
5.5	M3AA 132SB 2	3GAA131120-••E	3515	88,5	87,8	85,3	0,86	9	8,5	14,9	2,5	4,1	0,016	52	76
7.5	M3AA 132SC 2	3GAA131130-••E	3525	89,5	89,2	87,6	0,89	12	8,7	20,3	2,3	3,7	0,022	52	76
11	M3AA 160MLA 2	3GAA161410-••G	3547	91,4	91,5	90,3	0,9	16,7	8,6	29,6	2,6	3,5	0,044	91	73
15	M3AA 160MLB 2	3GAA161420-••G	3545	92,1	92,3	91,2	0,9	22,4	8,7	40,4	2,7	3,8	0,053	105	73
18.5	M3AA 160MLC 2	3GAA161430-••G	3543	92,4	92,8	92,1	0,92	27,2	8,7	49,8	3,1	3,8	0,063	123	73
22	M3AA 180MLA 2	3GAA181410-••G	3559	92,4	92,4	91,1	0,87	34,3	8,8	59	3	3,8	0,076	132	73
30	M3AA 200MLA 2	3GAA201410-••G	3562	93,1	92,8	91,4	0,9	44,9	8,7	80,4	2,8	3,4	0,178	210	76
37	M3AA 200MLB 2	3GAA201420-••G	3564	93,4	93,2	91,7	0,89	55,8	9,2	99,1	3,1	3,7	0,196	225	76
45	M3AA 225SMA 2	3GAA221210-••G	3566	93,5	93,2	91,7	0,88	68,6	7,7	120	2,6	2,7	0,244	263	78
55	M3AA 250SMA 2	3GAA251210-••G	3571	93,8	93,5	92,1	0,88	83,2	7,7	147	2,3	3	0,507	304	79
75	M3AA 280SMA 2	3GAA281210-••G	3568	94,4	94,3	93,2	0,89	112	8	200	2,6	3,2	0,583	389	79
90 [1]	M3AA 280SMB 2	3GAA281220-••G	3575	94,9	94,7	93,7	0,89	133	8,9	240	2,8	3,5	0,644	425	79

[1] Temperature rise class F

Output kW	Motor type	Product code	Speed r/min	Efficiency IEC 60034-30-1; 2014 Full load 100%	3/4 load 75%	1/2 load 50%	Power factor Cosφ	Current I_N A	I_s/I_N	Torque T_N Nm	T_l/T_N	T_b/T_N	Moment of inertia J = 1/4 GD²kgm²	Weight kg	Sound pressure Level L_{PA} dB
3600 r/min = 2 poles				**460 V 60 Hz**				**High-output design**							
11	M3AA 132SMF 2	3GAA131260-••E	3504	90,9	90,3	88,3	0,94	17,2	9	30	2,8	4,3	0,0187	77	68
15	M3AA 132SMG 2	3GAA131270-••E	3510	90,7	90,4	88,8	0,89	23,6	9,5	40,7	3,5	4,6	0,02	81	72
17.5	M3AA 132SMG 2	3GAA131270-••E	3495	91	91,5	90,5	0,9	27	8,9	47,8	2,8	3,8	0,02	81	69
18.5	M3AA 132SMJ 2	3GAA131290-••E	3500	91,6	91,8	90,9	0,91	28,2	10,5	50,3	3,3	5,3	0,0256	93	71
21.5	M3AA 132SMJ 2	3GAA131290-••E	3486	91,4	92,2	92	0,89	33,2	9,7	58,9	2,9	4,3	0,0256	93	68
22	M3AA 160MLD 2	3GAA161440-••G	3546	92,4	92,8	92	0,91	32,8	9,3	59,2	3,4	4,1	0,063	123	73
30	M3AA 160MLE 2	3GAA161450-••G	3539	92,5	93,2	92,7	0,91	44,6	9,1	80,9	3,3	3,9	0,072	145	73
30	M3AA 180MLB 2	3GAA181420-••G	3558	93	93,1	92,4	0,89	45,4	9,2	80,5	3,1	3,8	0,092	149	73
45	M3AA 200MLC 2	3GAA201430-••G	3563	93,4	93,3	92,2	0,88	68,7	9,2	120	3,2	3,7	0,196	225	76
55	M3AA 200MLD 2	3GAA201440-••G	3560	94,3	94,4	93,4	0,89	82,2	9	147	3,1	3,7	0,217	241	76
55	M3AA 225SMB 2	3GAA221220-••G	3567	93,9	93,7	92,4	0,89	82,6	7,5	147	2,5	2,8	0,274	286	78
75	M3AA 225SMC 2	3GAA221230-••G	3573	94,3	94,1	93	0,86	116	8,7	200	3,3	3,4	0,309	312	78
75	M3AA 250SMB 2	3GAA251220-••G	3575	94,5	94,4	93,3	0,89	111	8,6	200	2,9	3,4	0,583	351	79
80	M3AA 225SMD 2	3GAA221240-••G	3570	94,5	94,4	93,3	0,88	120	8,4	213	3,1	3,2	0,329	317	78
90	M3AA 250SMC 2	3GAA251230-••G	3575	95,1	95	94	0,89	133	8,6	240	2,7	3,4	0,644	386	79

Technical data, 460 V 60 Hz

IE2 Process performance aluminum motors

IP 55 - IC 411 - Insulation class F, temperature rise class B
IE2 efficiency class according to IEC 60034-30-1; 2014

Output kW	Motor type	Product code	Speed r/min	Efficiency IEC 60034-30-1; 2014 Full load 100%	3/4 load 75%	1/2 load 50%	Power factor Cosφ	Current I_N A	I_S/I_N	Torque T_N Nm	T_l/T_N	T_b/T_N	Moment of inertia J = 1/4 GD²kgm²	Weight kg	Sound pressure Level L_{PA} dB
1800 r/min = 4 poles				**460 V 60 Hz**				**CENELEC-design**							
0.12	M3AA 63A 4	3GAA062311-••E	1690	57,9	53,6	45,3	0,56	0,46	3,6	0,68	2,9	3,3	0,00027	3,7	
0.18	M3AA 63B 4	3GAA062312-••E	1700	66,6	63,3	55,8	0,55	0,61	4	1	3,4	3,7	0,00034	4,2	
0.25	M3AA 71A 4	3GAA072311-••E	1685	69,3	68,7	64	0,68	0,66	4,8	1,41	2,3	2,7	0,00066	5,2	48
0.37	M3AA 71B 4	3GAA072312-••E	1695	74,4	74,9	71,9	0,72	0,86	5,3	2	2,2	2,6	0,0008	5,9	48
0.55	M3AA 80A 4	3GAA082311-••E	1695	77,7	78,7	76,6	0,74	1,2	5,5	3	2	2,8	0,0013	8,5	53
0.75	M3AA 80D 4	3GAA082314-••E	1730	82,6	82,5	79,8	0,7	1,62	7	4,1	3	3,9	0,0016	10	53
1.1	M3AA 90LB 4	3GAA092520-••E	1740	84,6	83,7	80,7	0,76	2,1	7,6	6	3,1	3,9	0,0043	16	53
1.5	M3AA 90LD 4	3GAA092540-••E	1750	85,4	84,1	80,6	0,72	3	8,2	8,1	3,8	4,6	0,0048	17	53
2.2	M3AA 100LC 4	3GAA102530-••E	1760	87,5	86,9	84,2	0,75	4,2	9,1	11,9	3,4	4,5	0,009	25	57
3	M3AA 100LD 4	3GAA102540-••E	1750	88,2	87,5	85,6	0,8	5,3	8,2	16,3	3,6	4,2	0,011	28	66
4	M3AA 112MB 4	3GAA112320-••E	1745	87,6	87,5	85,7	0,77	7,4	8,2	21,8	3,3	3,7	0,0126	34	67
5.5	M3AA 132M 4	3GAA132300-••E	1769	89,7	89,6	87,9	0,79	9,5	7,3	29,8	2	3	0,038	48	69
7.5	M3AA 132MA 4	3GAA132310-••E	1764	89,5	89,6	88,3	0,81	12,8	7,5	40,6	1,9	3	0,048	59	66
11	M3AA 160MLA 4	3GAA162410-••G	1772	91,3	91,6	90,5	0,83	18,2	7,7	59,2	2,4	3,2	0,081	99	66
15	M3AA 160MLB 4	3GAA162420-••G	1775	92,2	92,4	91,5	0,83	24,6	8	80,6	2,7	3,3	0,099	118	66
18.5	M3AA 180MLA 4	3GAA182410-••G	1781	92,5	92,8	91,9	0,83	30,2	8,2	99,1	2,8	3,2	0,166	146	66
22	M3AA 180MLB 4	3GAA182420-••G	1780	93,1	93,4	92,5	0,83	35,7	8,3	118	2,8	3,3	0,195	163	66
30	M3AA 200MLA 4	3GAA202410-••G	1783	93,8	94	93,1	0,83	48,2	8,4	160	3	3,3	0,309	218	67
37	M3AA 225SMA 4	3GAA222210-••G	1782	93,6	93,5	92,5	0,84	59	8,1	198	2,8	3,2	0,356	240	70
45	M3AA 225SMB 4	3GAA222220-••G	1784	94,2	94,1	93,1	0,85	70,5	8,6	240	2,7	3,3	0,44	273	70
55	M3AA 250SMA 4	3GAA252210-••G	1782	95,2	95,4	94,9	0,84	86,3	8	294	2,8	3,3	0,765	314	71
75	M3AA 280SMA 4	3GAA282210-••G	1782	94,7	94,8	94,1	0,85	116	8,2	401	3	3,3	0,866	389	71
90	M3AA 280SMB 4	3GAA282220-••G	1782	94,9	95	94,3	0,84	141	9	482	3,6	3,8	0,941	418	71

Output kW	Motor type	Product code	Speed r/min	Efficiency IEC 60034-30-1; 2014 Full load 100%	3/4 load 75%	1/2 load 50%	Power factor Cosφ	Current I_N A	I_S/I_N	Torque T_N Nm	T_l/T_N	T_b/T_N	Moment of inertia J = 1/4 GD²kgm²	Weight kg	Sound pressure Level L_{PA} dB
1800 r/min = 4 poles				**460 V 60 Hz**				**High-output design**							
11	M3AA 132SMF 4	3GAA132260-••E	1765	91,5	91,2	89,6	0,8	18,7	8,8	59,5	2,2	3,5	0,0433	83	68
15	M3AA 132SMH 4	3GAA132280-••E	1760	91,7	91,5	90,2	0,78	26	8,2	81,54	2,6	3,4	0,0517	82	70
18.5	M3AA 160MLC 4	3GAA162430-••G	1774	92,4	92,7	92	0,83	30,2	8,7	99,5	3,3	3,6	0,11	127	66
22	M3AA 160MLD 4	3GAA162440-••G	1770	92,5	93,2	92,6	0,84	35,4	7,8	118	2,7	3,3	0,125	140	66
30	M3AA 180MLC 4	3GAA182430-••G	1777	93,2	93,6	93	0,83	48,6	8,3	161	2,9	3,3	0,217	177	66
37	M3AA 200MLB 4	3GAA202420-••G	1783	94,2	94,6	94,1	0,84	58,6	8,5	198	2,8	3,3	0,343	234	67
45	M3AA 200MLC 4	3GAA202430-••G	1783	94,4	94,5	93,9	0,83	72	8,6	241	3,2	3,6	0,366	246	67
55	M3AA 225SMC 4	3GAA222230-••G	1782	94,4	94,6	93,8	0,85	86	8,5	294	3,1	3,4	0,474	287	70
64	M3AA 225SMD 4	3GAA222240-••G	1783	94,4	94,4	93,4	0,85	100	9,4	342	3,5	3,7	0,542	314	70
75	M3AA 250SMB 4	3GAA252220-••G	1782	94,8	95	94,4	0,85	116	8,4	401	3,1	3,5	0,866	350	71
90	M3AA 250SMC 4	3GAA252230-••G	1776	95,2	95,3	94,6	0,84	141	8,6	483	3,5	3,7	0,941	377	71

Technical data, 460 V 60 Hz

IE2 Process performance aluminum motors

IP 55 - IC 411 - Insulation class F, temperature rise class B
IE2 efficiency class according to IEC 60034-30-1; 2014

Output kW	Motor type	Product code	Speed r/min	Efficiency IEC 60034-30-1; 2014 Full load 100%	3/4 load 75%	1/2 load 50%	Power factor Cosφ	Current I_N A	I_s/I_N	Torque T_N Nm	T_l/T_N	T_b/T_N	Moment of inertia J = 1/4 GD²kgm²	Weight kg	Sound pressure Level L_{PA} dB
1200 r/min = 6 poles				**460 V 60 Hz**				**CENELEC-design**							
0.09	M3AA 63A 6	3GAA063311-••E	1110	53,4	48,9	40,6	0,55	0,38	3,2	0,76	2,4	2,6	0,00042	4,2	
0.12	M3AA 63B 6	3GAA063312-••E	1110	55,1	50,6	42,2	0,53	0,51	3,4	1,02	2,6	3	0,00052	4,5	
0.18	M3AA 71A 6	3GAA073311-••E	1110	65,3	64,1	58,4	0,64	0,54	3,8	1,54	2,1	2,5	0,00092	5,5	42
0.25	M3AA 71B 6	3GAA073312-••E	1110	68,8	67,2	61,5	0,61	0,74	4,1	2,1	2,7	3	0,0012	6,5	42
0.37	M3AA 80A 6	3GAA083311-••E	1125	73,4	73,5	69,8	0,69	0,91	4,3	3,1	1,8	2,6	0,002	9	47
0.55	M3AA 80B 6	3GAA083312-••E	1120	74,6	75	71,7	0,68	1,36	4	4,6	1,8	2,4	0,0026	10	47
0.75	M3AA 90LB 6	3GAA093520-••E	1140	79,6	79,2	75,4	0,67	1,71	4,5	6,2	2,1	2,7	0,0048	18	44
1.1	M3AA 90LD 6	3GAA093540-••E	1141	80,3	80	77,1	0,64	2,6	5	9,1	2,4	3,1	0,0056	20	47
1.5	M3AA 100LC 6	3GAA103530-••E	1150	83,3	83,3	81,4	0,7	3,2	4,4	12,4	1,8	2,4	0,009	26	49
2.2	M3AA 112MB 6	3GAA113320-••E	1160	84,4	83,8	80,6	0,65	5	5,9	18,1	2,5	3,3	0,01	34	56
3	M3AA 132S 6	3GAA133100-••E	1161	85,4	84,3	81	0,67	6,84	4,7	24,3	1,7	2,8	0,031	46	60
4	M3AA 132MB 6	3GAA133320-••E	1177	87,3	86,1	82,9	0,69	8,3	8	32,4	2,2	5,1	0,045	54	60
5.5	M3AA 132MC 6	3GAA133330-••E	1165	87,6	86,5	83,4	0,67	11,8	6,8	44,96	2,7	3,2	0,049	59	64
7.5	M3AA 160MLA 6	3GAA163410-••G	1179	89,6	90,1	88,9	0,77	13,6	7,4	60,7	1,7	3,2	0,087	98	63
11	M3AA 160MLB 6	3GAA163420-••G	1177	90,4	91	90	0,77	19,8	8,4	89,2	2	3,4	0,114	125	63
15	M3AA 180MLA 6	3GAA183410-••G	1181	91,6	91,9	91,1	0,75	27,4	6,5	121	1,9	3,1	0,168	148	63
18.5	M3AA 200MLA 6	3GAA203410-••G	1190	92,2	92,2	91,1	0,79	31,8	7,5	148	2,5	3,2	0,382	196	67
22	M3AA 200MLB 6	3GAA203420-••G	1189	92,7	93,1	92,2	0,81	36,7	7,5	176	2,5	3,2	0,448	218	67
30	M3AA 225SMA 6	3GAA223210-••G	1189	93,2	93,4	92,4	0,82	49,2	8	240	2,8	3,2	0,663	266	67
37	M3AA 250SMA 6	3GAA253210-••G	1191	93,6	93,8	93,1	0,81	61,2	7,6	296	2,6	3	1,13	294	67
45	M3AA 280SMA 6	3GAA283210-••G	1190	93,8	94,2	93,6	0,83	72,5	7,6	361	2,6	2,9	1,37	378	67
55	M3AA 280SMB 6	3GAA283220-••G	1190	94	94,3	93,7	0,83	88,4	8,1	441	2,9	3,1	1,5	404	67

Output kW	Motor type	Product code	Speed r/min	Efficiency IEC 60034-30-1; 2014 Full load 100%	3/4 load 75%	1/2 load 50%	Power factor Cosφ	Current I_N A	I_s/I_N	Torque T_N Nm	T_l/T_N	T_b/T_N	Moment of inertia J = 1/4 GD²kgm²	Weight kg	Sound pressure Level L_{PA} dB
1200 r/min = 6 poles				**460 V 60 Hz**				**High-output design**							
15	M3AA 160MLC 6	3GAA163430-••G	1176	90,7	91,3	90,5	0,75	27,6	8,1	121	1,9	4,1	0,131	138	63
18.5	M3AA 180MLB 6	3GAA183420-••G	1180	92	92,5	91,8	0,78	32,3	6,6	149	1,9	3	0,198	162	63
30	M3AA 200MLC 6	3GAA203430-••G	1188	93	93,3	92,5	0,83	48,7	8	241	2,6	3,2	0,531	245	67
37	M3AA 225SMB 6	3GAA223220-••G	1188	93,8	94,1	93,5	0,83	59,6	7,5	297	2,5	3	0,821	300	67
45	M3AA 225SMC 6	3GAA223230-••G	1187	93,6	94,1	93,6	0,82	73,5	7,3	362	2,5	2,9	0,821	300	67
45	M3AA 250SMB 6	3GAA253220-••G	1191	93,9	94,2	93,5	0,82	73,3	7,9	360	2,7	3,1	1,37	341	67
55	M3AA 250SMC 6	3GAA253230-••G	1189	94	94,3	93,7	0,83	88,4	8,1	441	2,9	3,1	1,5	367	67

Technical data, 460 V 60 Hz

IE2 Process performance aluminum motors

IP 55 - IC 411 - Insulation class F, temperature rise class B
IE2 efficiency class according to IEC 60034-30-1; 2014

Output kW	Motor type	Product code	Speed r/min	Efficiency IEC 60034-30-1; 2014 Full load 100%	3/4 load 75%	1/2 load 50%	Power factor Cosφ	Current I_N A	I_s/I_N	Torque T_N Nm	T_l/T_N	T_b/T_N	Moment of inertia J = 1/4 GD²kgm²	Weight kg	Sound pressure Level L_{PA} dB
900 r/min = 8 poles				**460 V 60 Hz**				**CENELEC-design**							
0.055	M3AA 63B 8	3GAA064002-••E	850	36,9	31,7	24,3	0,42	0,45	2	0,62	2,7	3,2	0,00045	5,3	
0.09	M3AA 71A 8	3GAA074001-••E	840	50,8	46,2	38,3	0,5	0,44	2,9	1,02	2,7	2,7	0,00092	5,5	40
0.12	M3AA 71B 8	3GAA074002-••E	830	54,3	50,3	42,6	0,52	0,53	2,9	1,38	2,7	2,8	0,0012	6,5	43
0.18	M3AA 80A 8	3GAA084001-••E	850	59,5	56,2	49	0,55	0,69	3,3	2	2,6	2,9	0,0018	8,5	45
0.25	M3AA 80B 8	3GAA084002-••E	850	63,5	60,7	53,9	0,54	0,91	3,6	2,8	2,8	3,1	0,0024	9,5	50
0.37	M3AA 90S 8	3GAA094100-••E	851	62,9	58,7	50,4	0,48	1,56	3	4,1	1,9	2,7	0,0032	13	55
0.55	M3AA 90L 8	3GAA094500-••E	811	65,5	62,5	55,5	0,49	2,15	2,8	6,1	1,6	2,1	0,0043	16	55
0.75	M3AA 100LA 8	3GAA104510-••E	865	74,2	71,3	64,6	0,51	2,4	4,2	8,2	2,6	3,4	0,0069	20	46
1.1	M3AA 100LB 8	3GAA104520-••E	860	77,4	75,9	71	0,57	3,1	4	12,2	2,2	2,9	0,0082	23	53
1.5	M3AA 112M 8	3GAA114300-••E	855	78,6	77,4	73,1	0,61	3,9	4,2	16,7	2,1	2,8	0,01	28	55
2.2	M3AA 132S 8	3GAA134100-••E	870	79	78,2	74,9	0,64	5,4	4,1	24,1	1,4	2,4	0,031	46	59
3	M3AA 132M 8	3GAA134300-••E	865	81	81,8	79,8	0,68	6,8	3,2	33,1	1,2	2	0,037	53	61
4	M3AA 160MLA 8	3GAA164410-••G	882	85,8	85,7	83,4	0,64	9,1	5,9	43,3	1,6	3	0,068	84	63
5.5	M3AA 160MLB 8	3GAA164420-••G	881	86,4	86,6	84,6	0,65	12,2	6,2	59,6	1,5	3	0,085	98	63
7.5	M3AA 160MLC 8	3GAA164430-••G	882	87,7	87,9	86,3	0,63	17	5,1	81,2	1,5	3,2	0,132	137	63
11	M3AA 180MLA 8	3GAA184410-••G	885	88,6	89,2	87,8	0,66	23,5	5,1	118	2	2,9	0,214	175	63
15	M3AA 200MLA 8	3GAA204410-••G	890	91,5	91,8	90,8	0,71	28,5	5,9	160	2,3	2,7	0,45	217	64
18.5	M3AA 225SMA 8	3GAA224210-••G	890	92,1	92,3	91,2	0,72	35	5,9	198	2,2	2,5	0,669	266	67
22	M3AA 225SMB 8	3GAA224220-••G	890	92,4	92,6	91,6	0,73	40,8	6,3	236	2,2	2,6	0,722	279	67
30	M3AA 250SMA 8	3GAA254210-••G	893	93	93	91,9	0,7	57,8	6,6	320	2,8	2,7	1,4	340	67
37	M3AA 280SMA 8	3GAA284210-••G	892	93,1	93,2	92,3	0,73	68,3	6,4	396	2,6	2,6	1,51	403	67

Output kW	Motor type	Product code	Speed r/min	Efficiency IEC 60034-30-1; 2014 Full load 100%	3/4 load 75%	1/2 load 50%	Power factor Cosφ	Current I_N A	I_s/I_N	Torque T_N Nm	T_l/T_N	T_b/T_N	Moment of inertia J = 1/4 GD²kgm²	Weight kg	Sound pressure Level L_{PA} dB
900 r/min = 8 poles				**460 V 60 Hz**				**High-output design**							
0.18	M3AA 71C 8	3GAA074003-••E	830	53,5	50,1	42,4	0,56	0,75	3,1	2	2,5	2,6	0,0015	7	42
0.37	M3AA 80C 8	3GAA084003-••E	845	65,8	64	57,8	0,57	1,23	3,7	4,1	2,6	2,8	0,0031	11	47
0.75	M3AA 90LF 8	3GAA094560-••E	810	66,1	63,5	57,1	0,52	2,9	3	8,8	2	2,5	0,0048	18	46
1.5	M3AA 100LG 8	3GAA104570-••E	845	76,6	75,6	71,7	0,6	4	3,7	16,9	2,1	2,5	0,009	26	49
2	M3AA 112MF 8	3GAA114360-••E	850	79,1	79,1	75,7	0,63	5	4	22,4	1,9	2,6	0,0126	32	60
4.4 [1]	M3AA 132MF 8	3GAA134360-••E	860	80	82,1	80,9	0,69	10	3,8	48,8	1,3	2,6	0,049	54	71
18.5	M3AA 200MLB 8	3GAA204420-••G	891	91,2	91,4	90,2	0,72	35,3	6,1	198	2,3	2,6	0,53	245	64
30	M3AA 225SMC 8	3GAA224230-••G	889	92,8	93,1	92,4	0,72	56,3	6,4	322	2,6	2,7	0,828	300	67
37	M3AA 250SMB 8	3GAA254220-••G	891	93,6	93,9	93,3	0,72	68,9	6,1	396	2,8	2,6	1,51	367	67
45	M3AA 250SMC 8	3GAA254230-••G	891	93,4	93,9	93,4	0,74	81,7	6,4	482	2,5	2,7	1,51	367	67

[1] Temperature rise class F

Technical data, 400 V 50 Hz

IE3 Process performance aluminum motors

IP 55 - IC 411 - Insulation class F, temperature rise class B
IE3 efficiency class according to IEC 60034-30-1; 2014

Output kW	Motor type	Product code	Speed r/min	Efficiency IEC 60034-30-1; 2014 Full load 100%	3/4 load 75%	1/2 load 50%	Power factor Cosφ	Current I_N A	I_s/I_N	Torque T_N Nm	T_l/T_N	T_b/T_N	Moment of inertia J = 1/4 GD²kgm²	Weight kg	Sound pressure Level L_{PA} dB
3000 r/min = 2 poles				**400 V 50 Hz**				**CENELEC-design**							
0.75	M3AA 80B 2	3GAA081612-••J	2885	80,7	80,9	80,2	0,76	1,7	7,5	2,5	4,1	4,6	0,002	9,4	60
1.1	M3AA 80MC 2	3GAA081613-••J	2871	82,7	82,8	80,7	0,80	2,4	7,6	3,7	4,0	4,2	0,002	11	60
1.5	M3AA 90L 2	3GAA091500-••J	2900	84,4	84,6	83,1	0,86	3	6,7	4,9	2,6	3,2	0,002	16	60
2.2	M3AA 90LB 2	3GAA091520-••J	2903	85,9	86,3	84,9	0,79	4,7	7,4	7,2	3,2	3,8	0,003	18	63
3	M3AA 100LB 2	3GAA101520-••J	2897	87,5	88,5	88,6	0,93	5,4	7,6	9,9	2,7	3,1	0,009	31	62
4	M3AA 112MB 2	3GAA111320-••J	2873	88,5	89,7	89,9	0,92	7,2	8,5	13,2	3,2	3,9	0,013	35	68
5.5	M3AA 132SB 2	3GAA131120-••J	2914	89,2	89,4	88,3	0,91	9,8	8,4	18	2,6	4,5	0,021	56	73
7.5	M3AA 132SC 2	3GAA131130-••J	2898	90,5	91,0	90,6	0,91	13	8,1	24,7	2,8	3,9	0,023	63	73
22	M3AA 180MLA 2	3GAA181410-••L	2944	92,7	93,5	93,4	0,90	38	8,4	71,4	3,2	3,7	0,071	133	74
30	M3AA 200MLA 2	3GAA201410-••L	2957	93,3	94,0	93,9	0,88	52,7	8,7	96,9	3,0	3,8	0,104	171	74
37	M3AA 200MLB 2	3GAA201420-••L	2952	93,7	94,5	94,5	0,88	64,7	8,7	120	3,1	3,7	0,115	185	74
45	M3AA 225SMA 2	3GAA221210-••L	2955	94,0	94,9	95,0	0,89	77,6	8,0	145	2,9	3,3	0,214	254	77
55	M3AA 250SMA 2	3GAA251210-••L	2966	94,3	94,6	94,1	0,88	95,6	7,4	177	2,9	2,9	0,274	302	79
75	M3AA 280SMA 2	3GAA281210-••L	2971	94,7	95,1	94,8	0,90	127	7,9	241	2,8	3,3	0,644	413	81
90	M3AA 280SMB 2	3GAA281220-••L	2968	95,0	95,4	95,0	0,90	151	8,4	290	2,7	3,4	0,644	421	81

[1)] Temperature rise class F

Technical data, 400 V 50 Hz

IE3 Process performance aluminum motors

IP 55 - IC 411 - Insulation class F, temperature rise class B
IE3 efficiency class according to IEC 60034-30-1; 2014

Output kW	Motor type	Product code	Speed r/min	Efficiency IEC 60034-30-1; 2014 Full load 100%	3/4 load 75%	1/2 load 50%	Power factor Cosφ	Current I_N A	I_s/I_N	Torque T_N Nm	T_l/T_N	T_b/T_N	Moment of inertia J = 1/4 GD²kgm²	Weight kg	Sound pressure Level L_{PA} dB
3000 r/min = 2 poles				**400 V 50 Hz**				**CENELEC-design**							
0.75	M3AA 80MB 2	3GAA 081 320-••K	2894	83,1	82,8	80,0	0,74	1,74	7,9	2,4	3,7	4,2	0,0008	9,5	57
1.1	M3AA 80MC 2	3GAA 081 330-••K	2883	83,9	83,6	82,0	0,81	2,3	7,9	3,6	3,7	4,2	0,001	10,5	56
1.5	M3AA 90LB 2	3GAA 091 520-••K	2906	86,1	86,6	86,5	0,89	2,8	7,9	4,9	2,3	3,3	0,0027	17	60
2.2	M3AA 90LC 2	3GAA 091 530-••K	2900	87,4	88,8	88,9	0,89	4	8,3	7,2	2,9	3,5	0,0032	20	60
3	M3AA 100LC 2	3GAA 101 530-••K	2896	87,9	88,9	88,7	0,90	5,4	8,4	9,8	3,2	3,9	0,0057	28	62
4	M3AA 112MB 2	3GAA 111 320-••K	2888	88,5	89,8	90,0	0,91	7,1	8,4	13,2	3,2	4,0	0,0104	38	68
5.5	M3AA 132SB 2	3GAA 131 120-••K	2901	89,3	90,0	90,2	0,91	9,7	7,9	18,1	2,3	3,4	0,0154	58	68
7.5	M3AA 132SC 2	3GAA 131 130-••K	2909	90,7	91,8	92,0	0,90	13,1	8,3	24,6	3,0	3,9	0,0173	63	70
11	M3AA 160MLA 2	3GAA 161 410-••K	2943	92,1	92,8	92,5	0,92	18,7	8,1	35,6	2,7	3,4	0,052	106	69
15	M3AA 160MLB 2	3GAA 161 420-••K	2943	92,5	93,4	93,2	0,92	25,4	8,4	48,6	3,1	3,4	0,062	123	69
18.5	M3AA 160MLC 2	3GAA 161 430-••K	2942	93,1	93,9	93,9	0,93	30,8	8,3	60	3,1	3,6	0,072	137	69
22	M3AA 180MLA 2	3GAA 181 410-••K	2957	93,2	93,9	93,8	0,91	37,4	8,1	71	2,6	3,2	0,116	176	69
30	M3AA 200MLA 2	3GAA 201 410-••K	2958	94,2	94,8	94,7	0,90	51	7,8	96,8	2,8	3,1	0,196	225	72
37	M3AA 200MLB 2	3GAA 201 420-••K	2960	94,7	95,2	95,1	0,91	61,9	8,8	119	3,1	3,4	0,217	241	72
45	M3AA 225SMA 2	3GAA 221 210-••K	2972	94,8	95,1	94,7	0,89	76,8	7,8	144	3,1	3,0	0,323	326	74
55	M3AA 250SMA 2	3GAA 251 210-••K	2975	95,2	95,4	95,0	0,89	93,6	8,0	176	2,8	3,3	0,579	351	75
75	M3AA 280SMA 2	3GAA 281 210-••K	2971	94,7	95,1	94,8	0,90	127	7,9	241	2,8	3,3	0,644	412	81
90 [1]	M3AA 280SMB 2	3GAA 281 220-••K	2968	95,0	95,4	95,0	0,90	151	8,4	290	2,7	3,4	0,644	420	81

[1] Temperature rise class F

Output kW	Motor type	Product code	Speed r/min	Efficiency IEC 60034-30-1; 2014 Full load 100%	3/4 load 75%	1/2 load 50%	Power factor Cosφ	Current I_N A	I_s/I_N	Torque T_N Nm	T_l/T_N	T_b/T_N	Moment of inertia J = 1/4 GD²kgm²	Weight kg	Sound pressure Level L_{PA} dB
3000 r/min = 2 poles				**400 V 50 Hz**				**High-output design**							
22	M3AA 160MLD 2	3GAA 161 440-••K	2944	92,7	93,5	93,4	0,90	38	8,4	71,36	3,2	3,7	0,071	131	74
30	M3AA 180MLB 2	3GAA 181 420-••K	2957	93,3	94,0	93,9	0,88	52,7	8,7	96,88	3,0	3,8	0,104	162	74
37	M3AA 180MLC 2	3GAA 181 430-••K	2952	93,7	94,5	94,5	0,88	64,7	8,7	120	3,1	3,7	0,115	176	74
45	M3AA 200MLC 2	3GAA 201 430-••K	2955	94,0	94,6	94,5	0,89	77,6	8,0	145	2,9	3,3	0,214	250	77
55	M3AA 225SMB 2	3GAA 221 220-••K	2966	94,3	94,6	94,1	0,88	95,6	7,4	177	2,9	2,9	0,274	288	79
75	M3AA 225SMC 2	3GAA 221 230-••K	2966	94,7	94,8	94,1	0,88	129	8,1	241	3,3	3,0	0,329	328	79
75	M3AA 250SMB 2	3GAA 251 220-••K	2971	94,7	95,1	94,8	0,90	127	7,9	241	2,8	3,3	0,644	405	81
90 [1]	M3AA 250SMC 2	3GAA 251 230-••K	2968	95,0	95,4	95,0	0,90	151	8,4	290	2,7	3,4	0,644	414	81

[1] Temperature rise class F

Technical data, 400 V 50 Hz

IE3 Process performance aluminum motors

IP 55 - IC 411 - Insulation class F, temperature rise class B
IE3 efficiency class according to IEC 60034-30-1; 2014

Output kW	Motor type	Product code	Speed r/min	Efficiency IEC 60034-30-1; 2014 Full load 100%	3/4 load 75%	1/2 load 50%	Power factor Cosφ	Current I_N A	I_s/I_N	Torque T_N Nm	T_l/T_N	T_b/T_N	Moment of inertia J = 1/4 GD²kgm²	Weight kg	Sound pressure Level L_{PA} dB
1500 r/min = 4 poles				**400 V 50 Hz**				**CENELEC-design**							
0.75	M3AA 80ME 4	3GAA082614-••J	1437	82,5	82,8	81,0	0,73	1,9	5,9	5	3,5	3,8	0,004	13	54
1.1	M3AA 90LB 4	3GAA092520-••J	1437	84,1	83,7	81,2	0,80	2,5	8,0	7,3	3,3	3,8	0,007	17	50
1.5	M3AA 90LD 4	3GAA092540-••J	1445	85,3	85,0	82,7	0,75	3,3	7,6	10	3,4	4,1	0,007	20	50
2.2	M3AA 100LC 4	3GAA102530-••J	1455	86,7	86,6	84,6	0,80	4,6	7,9	14,4	3,2	4,0	0,011	25	54
3	M3AA 100LD 4	3GAA102540-••J	1445	87,9	88,4	87,8	0,83	5,9	7,7	19,8	2,8	3,5	0,014	32	63
4	M3AA 112MB 4	3GAA112320-••J	1451	88,6	89,4	89,0	0,77	8,6	7,6	26,3	3,1	4,1	0,018	34	64
5.5	M3AA 132M 4	3GAA132300-••J	1460	89,6	90,1	89,6	0,82	11,0	6,6	35,9	2,2	3,3	0,031	48	66
7.5	M3AA 132MA 4	3GAA132310-••J	1462	90,6	91,1	90,5	0,79	15,6	6,7	48,9	2,5	3,4	0,037	59	63
18.5	M3AA 180MLA 4	3GAA182410-••L	1473	92,6	93,3	93,1	0,82	35,1	8,3	120	3,1	3,5	0,124	137	67
30	M3AA 200MLA 4	3GAA202410-••L	1476	93,6	94,0	93,8	0,85	54,6	8,1	194	2,9	3,4	0	193	63
37	M3AA 225SMA 4	3GAA222210-••L	1480	93,9	94,8	94,8	0,82	69,3	7,5	239	2,8	2,9	0,362	249	68
55	M3AA 250SMA 4	3GAA252210-••L	1478	94,6	95,3	95,1	0,84	99,9	7,7	355	3,3	3,3	0,536	331	71
75	M3AA 280SMA 4	3GAA282210-••L	1482	95,0	95,5	95,3	0,82	138	7,9	483	3,6	3,8	0,941	410	73

Technical data, 400 V 50 Hz

IE3 Process performance aluminum motors

IP 55 - IC 411 - Insulation class F, temperature rise class B
IE3 efficiency class according to IEC 60034-30-1; 2014

Output kW	Motor type	Product code	Speed r/min	Efficiency IEC 60034-30-1; 2014 Full load 100%	3/4 load 75%	1/2 load 50%	Power factor Cosφ	Current I_N A	I_s/I_N	Torque T_N Nm	T_l/T_N	T_b/T_N	Moment of inertia J = 1/4 GD²kgm²	Weight kg	Sound pressure Level L_{PA} dB
1500 r/min = 4 poles				**400 V 50 Hz**				**CENELEC-design**							
0.75	M3AA 80ME 4	3GAA 082 350-••K	1440	84,0	83,9	81,9	0,76	1,68	7,9	4,9	3,3	3,7	0,0027	13,5	54
1.1	M3AA 90LC 4	3GAA 092 530-••K	1442	85,6	85,1	83,4	0,80	2,3	7,9	7,2	3,3	3,9	0,0055	19	56
1.5	M3AA 90LD 4	3GAA 092 540-••K	1439	85,3	84,7	82,8	0,78	3,2	8,2	9,9	3,5	4,0	0,0055	19	51
2.2	M3AA 100LE 4	3GAA 102 550-••K	1454	89,1	89,5	88,6	0,83	4,3	8,9	14,5	3,1	4,1	0,0144	36	54
3	M3AA 100LF 4	3GAA 102 560-••K	1452	88,8	89,2	88,3	0,83	5,9	9,0	19,7	3,5	4,2	0,0144	36	54
4	M3AA 112MB 4	3GAA 112 320-••K	1455	89,4	90,2	89,9	0,84	7,6	8,0	26,2	2,8	3,5	0,0189	44	64
5.5	M3AA 132MB 4	3GAA 132 320-••K	1463	91,0	91,8	91,7	0,82	10,7	7,3	35,8	2,4	3,3	0,0414	68	64
7.5	M3AA 132MC 4	3GAA 132 330-••K	1464	90,6	91,0	90,9	0,81	14,7	7,7	48,9	2,5	3,6	0,0414	68	64
11	M3AA 160MLA 4	3GAA 162 410-••K	1473	92,2	93,0	92,7	0,84	20,4	7,7	71,3	2,6	2,9	0,108	126	62
15	M3AA 160MLB 4	3GAA 162 420-••K	1474	92,6	93,4	93,2	0,84	27,8	7,9	97,1	2,8	3,3	0,125	140	62
18.5	M3AA 180MLA 4	3GAA 182 410-••K	1481	93,3	94,0	93,8	0,82	34,9	7,6	119	3,0	3,1	0,217	177	62
22	M3AA 180MLB 4	3GAA 182 420-••K	1480	93,3	94,1	94,1	0,82	41,5	8,2	141	2,8	3,1	0,217	176	62
30	M3AA 200MLA 4	3GAA 202 410-••K	1484	94,4	94,9	94,7	0,84	54,6	8,3	193	3,0	3,3	0,366	246	63
37	M3AA 225SMA 4	3GAA 222 210-••K	1482	94,9	95,5	95,4	0,86	65,4	7,7	238	2,8	3,1	0,536	315	66
45	M3AA 225SMB 4	3GAA 222 220-••K	1482	95,2	95,7	95,6	0,85	80,2	7,9	289	2,8	3,2	0,536	316	66
55	M3AA 250SMA 4	3GAA 252 210-••K	1485	95,4	95,9	95,7	0,85	97,8	7,9	353	3,0	3,3	0,933	376	67
75	M3AA 280SMA 4	3GAA 282 210-••K	1482	95,0	95,5	95,3	0,82	138	7,9	483	3,6	3,8	0,941	409	73

Output kW	Motor type	Product code	Speed r/min	Efficiency IEC 60034-30-1; 2014 Full load 100%	3/4 load 75%	1/2 load 50%	Power factor Cosφ	Current I_N A	I_s/I_N	Torque T_N Nm	T_l/T_N	T_b/T_N	Moment of inertia J = 1/4 GD²kgm²	Weight kg	Sound pressure Level L_{PA} dB
1500 r/min = 4 poles				**400 V 50 Hz**				**High-output design**							
18.5	M3AA 160MLC 4	3GAA 162 430-••K	1473	92,6	93,4	93,1	0,82	35,1	8,3	120	3,1	3,5	0,124	135	67
30	M3AA 180MLC 4	3GAA 182 430-••K	1476	93,6	94,2	94,2	0,82	56,5	7,4	195	2,5	3,2	0,191	176	62
37	M3AA 200MLB 4	3GAA 202 420-••K	1480	93,9	94,8	94,8	0,82	69,3	7,5	239	2,8	2,9	0,362	244	68
55	M3AA 225SMC 4	3GAA 222 230-••K	1478	94,6	94,9	94,8	0,84	99,9	7,7	355	3,3	3,3	0,536	318	71
75	M3AA 250SMB 4	3GAA 252 220-••K	1482	95,0	95,4	95,0	0,84	135	7,9	483	3,3	3,5	0,941	389	73

Technical data, 400 V 50 Hz

IE3 Process performance aluminum motors

IP 55 - IC 411 - Insulation class F, temperature rise class B
IE3 efficiency class according to IEC 60034-30-1; 2014

				Efficiency IEC 60034-30-1; 2014				Current		Torque					
Output kW	Motor type	Product code	Speed r/min	Full load 100%	3/4 load 75%	1/2 load 50%	Power factor Cosφ	I_N A	I_s/I_N	T_N Nm	T_l/T_N	T_b/T_N	Moment of inertia J = 1/4 GD²kgm²	Weight kg	Sound pressure Level L_{PA} dB
1000 r/min = 6 poles				**400 V 50 Hz**				**CENELEC-design**							
0.75	M3AA 90LB 6	3GAA093520-••J	930	78,9	78,9	76,7	0,68	2,1	3,9	7,7	2,3	2,7	0,007	17	44
1.1	M3AA 90LD 6	3GAA093540-••J	928	81,0	81,7	81,2	0,77	2,7	4,0	11,3	1,7	2,2	0,007	19	44
1.5	M3AA 100LC 6	3GAA103530-••J	962	84,7	85,0	83,3	0,69	3,6	5,3	14,9	2,5	3,1	0,014	28	49
2.2	M3AA 112MB 6	3GAA113320-••J	960	84,3	85,0	84,0	0,65	5,9	5,3	21,9	2,3	3,0	0,018	33	56
3	M3AA 132S 6	3GAA133100-••J	972	85,6	85,5	83,6	0,69	7,4	5,3	29,5	1,8	3,0	0,031	48	57
4	M3AA 132MA 6	3GAA133310-••J	964	86,8	88,0	87,8	0,75	8,9	4,5	39,1	1,8	3,0	0,039	60	61
5.5	M3AA 132MC 6	3GAA133330-••J	970	88,5	89,4	88,8	0,67	13,3	6,1	54,2	2,3	3,1	0,044	64	61
18.5	M3AA 200MLA 6	3GAA203410-••L	980	91,7	92,5	92,0	0,75	38,8	6,4	180	2,1	3,1	0,22	177	65
37	M3AA 250SMA 6	3GAA253210-••L	985	93,3	94,2	94,0	0,80	71,5	7,0	359	2,7	3,0	0,813	320	68
45	M3AA 280SMA 6	3GAA283210-••L	991	93,7	94,1	93,6	0,81	85,5	7,6	434	2,9	3,3	1,5	399	68
55	M3AA 280SMB 6	3GAA283220-••L	989	94,1	94,7	94,4	0,80	105	7,1	531	3,0	3,1	1,49	400	68

Technical data, 400 V 50 Hz

IE3 Process performance aluminum motors

IP 55 - IC 411 - Insulation class F, temperature rise class B
IE3 efficiency class according to IEC 60034-30-1; 2014

Output kW	Motor type	Product code	Speed r/min	Efficiency IEC 60034-30-1; 2014 Full load 100%	3/4 load 75%	1/2 load 50%	Power factor Cosφ	Current I_N A	I_s/I_N	Torque T_N Nm	T_l/T_N	T_b/T_N	Moment of inertia J = 1/4 GD²kgm²	Weight kg	Sound pressure Level L_{PA} dB
1000 r/min = 6 poles				**400 V 50 Hz**				**CENELEC-design**							
0.75	M3AA 90LD 6	3GAA 093 540-••K	937	80,3	80,5	79,5	0,76	1,78	4,6	7,6	2,1	2,3	0,0055	19	55
1.1	M3AA 100LE 6	3GAA 103 550-••K	963	84,0	85,0	84,0	0,69	2,6	5,6	10,9	2,3	3,1	0,0138	35	49
1.5	M3AA 100LF 6	3GAA 103 560-••K	969	85,7	85,9	84,2	0,65	3,7	7,0	14,7	3,3	4,1	0,0138	35	49
2.2	M3AA 112MC 6	3GAA 113 330-••K	967	87,2	87,9	87,1	0,69	5,2	6,5	21,7	2,4	3,5	0,0187	43	68
3	M3AA 132MC 6	3GAA 133 330-••K	978	88,5	88,8	87,7	0,69	7	6,2	29,2	2,0	3,0	0,0402	66	61
4	M3AA 132MD 6	3GAA 133 340-••K	973	88,5	89,3	89,1	0,72	9,1	5,6	39,2	1,9	2,7	0,0402	67	61
5.5	M3AA 132ME 6	3GAA 133 350-••K	973	89,5	90,2	89,6	0,74	12	5,8	53,9	2,0	2,9	0,039	63	61
7.5	M3AA 160MLA 6	3GAA 163 410-••K	980	90,8	91,5	91,0	0,78	15,2	7,9	73	1,7	3,3	0,114	125	59
11	M3AA 160MLB 6	3GAA 163 420-••K	979	91,2	91,8	91,1	0,74	23,5	8,5	107	2,2	3,9	0,131	139	59
15	M3AA 180MLA 6	3GAA 183 410-••K	987	92,2	92,5	91,5	0,77	30,4	5,5	146	1,7	2,7	0,225	175	59
18.5	M3AA 200MLA 6	3GAA 203 410-••K	990	92,8	93,2	92,6	0,77	37,3	7,5	178	2,6	3,2	0,448	218	63
22	M3AA 200MLB 6	3GAA 203 420-••K	990	93,3	93,7	93,1	0,79	43	7,8	212	2,6	3,2	0,531	245	63
30	M3AA 225SMA 6	3GAA 223 210-••K	989	94,1	94,7	94,5	0,81	56,8	7,9	289	2,8	3,1	0,813	310	63
37	M3AA 250SMA 6	3GAA 253 210-••K	991	94,4	94,9	94,7	0,83	68	7,7	356	2,7	2,9	1,49	367	63
45	M3AA 280SMA 6	3GAA 283 210-••K	991	93,7	94,1	93,6	0,81	85,5	7,6	434	2,9	3,3	1,5	398	68
55	M3AA 280SMB 6	3GAA 283 220-••K	989	94,1	94,8	94,5	0,80	105	7,1	531	3,0	3,1	1,49	399	68

Output kW	Motor type	Product code	Speed r/min	Efficiency IEC 60034-30-1; 2014 Full load 100%	3/4 load 75%	1/2 load 50%	Power factor Cosφ	Current I_N A	I_s/I_N	Torque T_N Nm	T_l/T_N	T_b/T_N	Moment of inertia J = 1/4 GD²kgm²	Weight kg	Sound pressure Level L_{PA} dB
1000 r/min = 6 poles				**400 V 50 Hz**				**High-output design**							
18.5	M3AA 180MLB 6	3GAA 183 420-••K	980	91,7	92,5	92,0	0,75	38,8	6,4	180	2,1	3,1	0,22	168	65
37	M3AA 225SMB 6	3GAA 223 220-••K	985	93,3	93,8	93,5	0,80	71,5	7,0	359	2,7	3,0	0,813	307	68
45	M3AA 250SMB 6	3GAA 253 220-••K	991	93,7	94,1	93,6	0,81	85,5	7,6	434	2,9	3,3	1,5	389	68
55	M3AA 250SMC 6	3GAA 253 230-••K	989	94,1	94,8	94,6	0,80	105	7,1	531	3,0	3,1	1,49	390	68

Technical data, 460V 60Hz

IE3 Process performance aluminum motors

IP 55 - IC 411 - Insulation class F, temperature rise class B
IE3 efficiency class according to IEC 60034-30-1; 2014

Output kW	Motor type	Product code	Speed r/min	Efficiency IEC 60034-30-1; 2014 Full load 100%	3/4 load 75%	1/2 load 50%	Power factor Cosφ	Current I_N A	I_S/I_N	Torque T_N Nm	T_l/T_N	T_b/T_N	Moment of inertia J = 1/4 GD²kgm²	Weight kg	Sound pressure Level L_{PA} dB
3600 r/min = 2 poles				**460 V 60 Hz**				**CENELEC-design**							
0.75	M3AA 80MB 2	3GAA 081 320-••K	3502	77,0	75,1	69,9	0,72	1,56	8,9	2	4,3	5,2	0,0008	9,5	61
1.1	M3AA 80MC 2	3GAA 081 330-••K	3500	84,0	83,0	80,2	0,78	2	9,9	3	4,4	5,3	0,001	10,5	60
1.5	M3AA 90LB 2	3GAA 091 520-••K	3522	85,5	85,3	84,0	0,88	2,4	9,6	4	2,5	4,0	0,0027	17	65
2.2	M3AA 90LC 2	3GAA 091 530-••K	3517	86,5	87,1	85,8	0,88	3,5	9,9	5,9	3,2	4,2	0,0032	20	65
3	M3AA 100LC 2	3GAA 101 530-••K	3512	88,5	88,7	87,2	0,89	4,7	9,9	8,1	3,5	4,6	0,0057	28	65
4	M3AA 112MB 2	3GAA 111 320-••K	3500	88,5	88,9	87,9	0,90	6,2	10,0	10,9	3,6	4,8	0,0104	38	71
5.5	M3AA 132SB 2	3GAA 131 120-••K	3519	89,5	89,4	88,7	0,90	8,4	9,1	14,9	2,5	3,9	0,0154	58	74
7.5	M3AA 132SC 2	3GAA 131 130-••K	3524	90,2	90,7	90,0	0,90	11,4	9,6	20,3	3,1	4,5	0,0173	63	73
11	M3AA 160MLA 2	3GAA 161 410-••K	3552	91,8	91,8	90,6	0,91	16,5	9,2	29,5	2,9	3,8	0,052	106	73
15	M3AA 160MLB 2	3GAA 161 420-••K	3552	92,3	92,5	91,5	0,92	22,1	9,6	40,3	3,3	3,8	0,062	123	73
18.5	M3AA 160MLC 2	3GAA 161 430-••K	3551	92,9	93,1	92,4	0,93	26,8	9,5	49,7	3,4	4,0	0,072	137	73
22	M3AA 180MLA 2	3GAA 181 410-••K	3563	92,9	93,0	92,2	0,91	32,5	9,2	58,9	2,8	3,6	0,116	176	73
30	M3AA 200MLA 2	3GAA 201 410-••K	3563	93,5	93,5	92,6	0,90	44,5	8,8	80,4	2,9	3,5	0,196	225	76
37	M3AA 200MLB 2	3GAA 201 420-••K	3566	94,0	94,1	93,3	0,91	54	10,0	99	3,2	3,8	0,217	241	76
45	M3AA 225SMA 2	3GAA 221 210-••K	3575	94,4	94,2	93,1	0,89	66,8	8,9	120	3,2	3,3	0,323	326	78
55	M3AA 250SMA 2	3GAA 251 210-••K	3578	94,4	94,2	93,1	0,89	81,5	9,1	146	2,9	3,6	0,579	351	79
75	M3AA 280SMA 2	3GAA 281 210-••K	3575	94,9	94,9	94,1	0,90	110	9,0	200	3,0	3,6	0,644	412	85
90	M3AA 280SMB 2	3GAA 281 220-••K	3573	95,0	95,0	94,0	0,90	132	9,5	241	2,8	3,7	0,644	420	85

Output kW	Motor type	Product code	Speed r/min	Efficiency IEC 60034-30-1; 2014 Full load 100%	3/4 load 75%	1/2 load 50%	Power factor Cosφ	Current I_N A	I_S/I_N	Torque T_N Nm	T_l/T_N	T_b/T_N	Moment of inertia J = 1/4 GD²kgm²	Weight kg	Sound pressure Level L_{PA} dB
3600 r/min = 2 poles				**460 V 60 Hz**				**High-output design**							
22	M3AA 160MLD 2	3GAA 161 440-••K	3552	92,9	93,2	92,5	0,90	32,9	9,7	59,15	3,5	4,2	0,071	131	78
30	M3AA 180MLB 2	3GAA 181 420-••K	3563	93,3	93,5	92,9	0,88	45,7	10,0	80,4	3,3	4,3	0,104	162	78
37	M3AA 180MLC 2	3GAA 181 430-••K	3560	93,9	94,2	93,6	0,88	56,1	10,0	99,25	3,4	4,2	0,115	176	78
45	M3AA 200MLC 2	3GAA 201 430-••K	3562	94,4	94,8	94,3	0,89	67,2	9,1	121	3,1	3,7	0,214	250	81
55	M3AA 225SMB 2	3GAA 221 220-••K	3571	94,4	94,3	93,2	0,89	82,1	8,5	147	3,0	3,2	0,274	288	83
75	M3AA 225SMC 2	3GAA 221 230-••K	3571	94,9	94,8	93,9	0,89	111	9,3	201	3,4	3,4	0,329	328	83
75	M3AA 250SMB 2	3GAA 251 220-••K	3575	94,9	94,9	94,1	0,90	110	9,0	200	3,0	3,6	0,644	405	85
90	M3AA 250SMC 2	3GAA 251 230-••K	3573	95,0	95,0	94,0	0,90	132	9,5	241	2,8	3,7	0,644	414	85

Technical data, 460V 60Hz

IE3 Process performance aluminum motors

IP 55 - IC 411 - Insulation class F, temperature rise class B
IE3 efficiency class according to IEC 60034-30-1; 2014

Output kW	Motor type	Product code	Speed r/min	Efficiency IEC 60034-30-1; 2014 Full load 100%	3/4 load 75%	1/2 load 50%	Power factor Cosφ	Current I_N A	I_s/I_N	Torque T_N Nm	T_l/T_N	T_b/T_N	Moment of inertia J = 1/4 GD²kgm²	Weight kg	Sound pressure Level L_{PA} dB
1800 r/min = 4 poles				**460 V 60 Hz**				**CENELEC-design**							
0.75	M3AA 80ME 4	3GAA 082 350-••K	1748	85,5	84,4	81,6	0,74	1,48	9,5	4	3,8	4,5	0,0027	13,5	57
1.1	M3AA 90LC 4	3GAA 092 530-••K	1749	86,5	85,4	82,5	0,77	2	8,4	6	3,7	4,6	0,0055	19	56
1.5	M3AA 90LD 4	3GAA 092 540-••K	1748	86,5	85,1	82,0	0,75	2,9	9,5	8,1	4,0	5,0	0,0055	19	57
2.2	M3AA 100LE 4	3GAA 102 550-••K	1760	89,5	89,2	87,4	0,81	3,8	10,2	11,9	3,3	4,7	0,0144	36	57
3	M3AA 100LF 4	3GAA 102 560-••K	1759	89,5	89,3	87,4	0,81	5,2	10,4	16,3	3,8	4,9	0,0144	36	57
4	M3AA 112MB 4	3GAA 112 320-••K	1760	89,5	89,4	87,9	0,82	6,7	9,2	21,7	3,1	4,1	0,0189	44	67
5.5	M3AA 132MB 4	3GAA 132 320-••K	1768	91,7	92,1	91,2	0,80	9,4	8,2	29,7	2,5	3,7	0,0414	68	67
7.5	M3AA 132MC 4	3GAA 132 330-••K	1766	91,7	91,6	90,8	0,79	13	8,7	40,5	2,6	3,9	0,0414	68	69
11	M3AA 160MLA 4	3GAA 162 410-••K	1777	92,7	92,9	92,1	0,83	17,9	8,7	59,1	2,8	3,3	0,108	126	66
15	M3AA 160MLB 4	3GAA 162 420-••K	1778	93,1	93,4	92,6	0,83	24,3	8,9	80,5	3,0	3,7	0,125	140	66
18.5	M3AA 180MLA 4	3GAA 182 410-••K	1782	93,6	93,9	93,2	0,81	30,6	8,5	99,1	3,2	3,4	0,217	177	66
22	M3AA 180MLB 4	3GAA 182 420-••K	1783	93,8	94,2	93,7	0,82	35,8	9,3	117	3,0	3,4	0,217	176	66
30	M3AA 200MLA 4	3GAA 202 410-••K	1786	94,7	94,8	94,1	0,83	47,9	9,4	160	3,3	3,7	0,366	246	67
37	M3AA 225SMA 4	3GAA 222 210-••K	1784	95,3	95,5	94,9	0,85	57,3	8,8	198	2,9	3,4	0,536	315	70
45	M3AA 225SMB 4	3GAA 222 220-••K	1785	95,3	95,4	94,8	0,84	70,5	8,9	240	3,0	3,6	0,536	316	70
55	M3AA 250SMA 4	3GAA 252 210-••K	1787	95,7	95,8	95,2	0,84	85,8	9,1	293	3,3	3,7	0,933	376	71
75	M3AA 280SMA 4	3GAA 282 210-••K	1784	95,4	95,5	94,8	0,82	120	9,1	401	4,0	4,3	0,941	409	77

Output kW	Motor type	Product code	Speed r/min	Efficiency IEC 60034-30-1; 2014 Full load 100%	3/4 load 75%	1/2 load 50%	Power factor Cosφ	Current I_N A	I_s/I_N	Torque T_N Nm	T_l/T_N	T_b/T_N	Moment of inertia J = 1/4 GD²kgm²	Weight kg	Sound pressure Level L_{PA} dB
1800 r/min = 4 poles				**460 V 60 Hz**				**High-output design**							
18.5	M3AA 160MLC 4	3GAA 162 430-••K	1777	92,8	93,0	92,0	0,80	31,2	9,2	99,42	3,3	3,9	0,124	135	71
30	M3AA 180MLC 4	3GAA 182 430-••K	1780	94,3	94,5	93,9	0,81	49	8,5	161,2	2,9	3,7	0,191	176	65
37	M3AA 200MLB 4	3GAA 202 420-••K	1783	94,5	94,9	94,4	0,82	59,9	8,6	198	3,1	3,3	0,362	244	68
55	M3AA 225SMC 4	3GAA 222 230-••K	1782	94,8	95,0	94,3	0,84	86,7	8,7	295	3,4	3,6	0,536	318	75
75	M3AA 250SMB 4	3GAA 252 220-••K	1784	95,4	95,4	94,6	0,84	117	9,1	401	3,6	4,0	0,941	389	77

Technical data, 460V 60Hz

IE3 Process performance aluminum motors

IP 55 - IC 411 - Insulation class F, temperature rise class B
IE3 efficiency class according to IEC 60034-30-1; 2014

Output kW	Motor type	Product code	Speed r/min	Efficiency IEC 60034-30-1; 2014 Full load 100%	3/4 load 75%	1/2 load 50%	Power factor Cosφ	Current I_N A	I_s/I_N	Torque T_N Nm	T_l/T_N	T_b/T_N	Moment of inertia J = 1/4 GD²kgm²	Weight kg	Sound pressure Level L_{PA} dB
1200 r/min = 6 poles				**460 V 60 Hz**				**CENELEC-design**							
0.75	M3AA 90LD 6	3GAA 093 540-••K	1148	82,5	81,9	79,6	0,73	1,56	5,1	6,2	2,2	2,8	0,0055	19	61
1.1	M3AA 100LE 6	3GAA 103 550-••K	1168	87,5	87,5	85,8	0,66	2,3	6,3	9	2,4	3,5	0,0138	35	52
1.5	M3AA 100LF 6	3GAA 103 560-••K	1174	88,5	88,0	85,8	0,62	3,3	7,7	12,2	3,5	4,7	0,0138	35	52
2.2	M3AA 112MC 6	3GAA 113 330-••K	1172	89,5	89,6	88,4	0,66	4,6	7,3	17,9	2,5	4,0	0,0187	43	71
3	M3AA 132MC 6	3GAA 133 330-••K	1181	89,5	89,4	88,1	0,67	6,3	7,0	24,2	2,2	3,5	0,0402	66	64
4	M3AA 132MD 6	3GAA 133 340-••K	1176	89,5	89,9	88,9	0,69	8	6,2	32,4	2,0	3,0	0,0402	67	64
5.5	M3AA 132ME 6	3GAA 133 350-••K	1177	91,0	91,3	90,4	0,72	10,4	6,6	44,6	2,1	3,3	0,039	63	64
7.5	M3AA 160MLA 6	3GAA 163 410-••K	1182	91,4	91,5	90,3	0,76	13,5	8,6	60,5	1,8	3,7	0,114	125	63
11	M3AA 160MLB 6	3GAA 163 420-••K	1183	91,7	91,8	90,5	0,73	20,6	9,4	88,7	2,3	4,4	0,131	139	63
15	M3AA 180MLA 6	3GAA 183 410-••K	1189	92,3	92,0	90,5	0,75	27,1	6,0	120	1,8	3,1	0,225	175	63
18.5	M3AA 200MLA 6	3GAA 203 410-••K	1191	93,3	93,2	92,1	0,77	32,3	8,6	148	2,9	3,6	0,448	218	67
22	M3AA 200MLB 6	3GAA 203 420-••K	1191	93,8	93,8	92,8	0,78	37,7	8,8	176	2,9	3,6	0,531	245	67
30	M3AA 225SMA 6	3GAA 223 210-••K	1191	94,2	94,3	93,6	0,80	49,9	8,9	240	3,2	3,5	0,813	310	67
37	M3AA 250SMA 6	3GAA 253 210-••K	1192	94,5	94,7	94,1	0,82	59,9	8,6	296	3,0	3,2	1,49	367	67
45	M3AA 280SMA 6	3GAA 283 210-••K	1192	94,5	94,5	93,6	0,80	75	8,6	361	3,2	3,6	1,5	398	72
55	M3AA 280SMB 6	3GAA 283 220-••K	1191	94,5	94,7	94,0	0,81	90,1	8,2	441	3,3	3,5	1,49	399	72

Output kW	Motor type	Product code	Speed r/min	Efficiency IEC 60034-30-1; 2014 Full load 100%	3/4 load 75%	1/2 load 50%	Power factor Cosφ	Current I_N A	I_s/I_N	Torque T_N Nm	T_l/T_N	T_b/T_N	Moment of inertia J = 1/4 GD²kgm²	Weight kg	Sound pressure Level L_{PA} dB
1200 r/min = 6 poles				**460 V 60 Hz**				**High-output design**							
18.5	M3AA 180MLB 6	3GAA 183 420-••K	1183	93,0	93,0	91,9	0,73	34,2	7,4	149	2,5	3,5	0,22	168	69
37	M3AA 225SMB 6	3GAA 223 220-••K	1188	94,1	94,4	93,8	0,80	61,8	8,0	297	3,0	3,3	0,813	307	72
45	M3AA 250SMB 6	3GAA 253 220-••K	1192	94,5	94,5	93,6	0,80	75	8,6	361	3,2	3,6	1,5	389	72
55	M3AA 250SMC 6	3GAA 253 230-••K	1191	94,5	94,7	94,0	0,81	90,1	8,2	441	3,3	3,5	1,49	390	72

Variant codes
Aluminum motors

Variant codes specify additional options and features to the standard motor. The desired features are listed as three-digit variant codes in the motor order. Note also that there are variants that cannot be used together.

Most of the variant codes apply to IE2 and IE3 motors. However, confirm the availability of variants for IE3 motors with your ABB sales office before making an order. Variant codes for L generation motors on request!

		Frame size												
Code/Variants		**63**	**71**	**80**	**90**	**100**	**112**	**132**	**160**	**180**	**200**	**225**	**250**	**280**
Administration														
531	Sea freight packing	-	-	-	●	●	●	●	●	●	●	●	●	●
533	Wooden sea freight packing	-	-	-	●	●	●	●	●	●	●	●	●	●
Balancing														
417	Vibration acc. to Grade B (IEC 60034-14).	-	-	-	●	●	●	●	●	●	●	●	●	●
423	Balanced without key.	-	-	-	●	●	●	●	●	●	●	●	●	●
424	Full-key balancing	-	-	-	●	●	●	●	●	●	●	●	●	●
Bearings and Lubrication														
036	Transport lock for bearings.	-	-	-	●	●	●	●	●	●	●	●	●	●
037	Roller bearing at D-end.	-	-	-	●	●	●	●	●	●	●	●	●	●
039	Cold-resistant grease	●	●	●	●	●	●	●	○	○	○	○	○	○
040	Heat-resistant grease	-	●	●	●	●	●	●	○	○	-	-	-	-
041	Bearings regreasable via grease nipples.	-	-	-	●	●	●	●	●	●	●	●	●	○
043	SPM compatible nipples for vibration measurement	-	-	-	-	-	●	●	●	●	●	●	●	○
057	2RS bearings at both ends.	●	●	●	●	●	●	●	●	●	●	●	●	●
058	Angular contact bearing at D-end, shaft force away from bearing.	-	-	-	●	●	●	●	●	●	●	●	●	●
059	Angular contact bearing at N-end, shaft force towards bearing.	-	-	-	●	●	●	●	●	●	●	●	●	●
188	63-series bearing in D-end	-	-	-	●	○	○	●	○	○	○	○	○	○
593	Bearings grease suitable for food and beverage industry.	-	●	●	●	●	●	●	●	●	●	●	●	●
796	Grease nipples JIS B 1575 PT 1/8 Type A	-	●	●	●	●	●	●	●	●	●	●	●	●
797	Stainless steel SPM nipples	-	-	-	-	-	●	●	●	●	●	●	●	●
798	Stainless steel grease nipples	-	-	-	-	-	●	●	●	●	●	●	●	●
Brakes														
213	Brake with increased degree of protection.	-	-	-	-	-	-	-	●	●	-	-	-	-
412	Built-in brake.	-	-	-	-	-	-	-	●	●	-	-	-	-
Branch standard designs														
071	Cooling Tower duty	-	-	-	-	-	●	●	●	●	●	●	●	●
079	Silumin-alloy rotor cage.	-	-	-	●	●	●	●	-	-	-	-	-	-
142	Manilla connection.	-	-	-	●	●	●	●	●	●	●	●	●	●
178	Stainless steel / acid proof bolts.	●	●	●	●	●	●	●	●	●	●	●	●	●
199	Extreme heavy duty design.	-	-	-	-	-	●	-	-	-	-	-	-	-
209	Non-standard voltage or frequency, (special winding).	-	-	-	●	●	●	●	●	●	●	●	●	●
217	Cast iron D-end shield (on aluminum motor).	-	-	-	●	●	●	●	○	○	○	○	○	○
385	Paint free motor	-	-	-	●	●	●	●	-	-	-	-	-	-
425	Corrosion protected stator and rotor core.	-	●	●	●	●	●	●	●	●	●	●	●	●
983	Shock resistant design	-	-	-	-	-	-	-	-	-	●	●	●	-
Cooling system														
053	Metal fan cover.	○	●	●	●	●	●	●	○	○	○	○	○	○
068	Light alloy metal fan	-	●	●	●	●	●	●	●	●	●	●	●	●
075	Cooling method IC418 (without fan).	-	-	-	●	●	●	●	●	●	●	●	●	●
183	Separate motor cooling (fan axial, N-end).	-	●	●	●	●	●	●	●	●	●	●	●	●
189	Separate motor cooling, IP44, 400V, 50Hz (fan axial, N-end).	-	-	-	-	-	-	-	●	●	●	●	●	●
Documentation														
141	Binding 2D main dimension drawing.	●	●	●	●	●	●	●	●	●	●	●	●	●
Drain holes														
065	Plugged existing drain holes.	○	●	●	●	●	●	●	●	●	●	●	●	●
Earthing Bolt														

○ = Included as standard | ● = Available as option | - = Not applicable

		Frame size												
Code/Variants		**63**	**71**	**80**	**90**	**100**	**112**	**132**	**160**	**180**	**200**	**225**	**250**	**280**
067	External earthing bolt.	●	●	●	●	●	●	●	●	●	●	●	●	●
Hazardous Environments														
334	Ex t, Dust group III B T125C Db, IP6X (non-conductive dust) acc. IEC/ EN60079-31.	-	-	-	●	●	●	●	●	●	●	●	●	●
335	Ex t, Dust group III B T125C Dc, IP5X (non-conductive dust) acc. IEC/ EN60079-31.	-	-	-	●	●	●	●	●	●	●	●	●	●
336	Ex t, Dust group III C T125 Db, IP6X (conductive dust) acc. IEC/ EN60079-31.	-	-	-	●	●	●	●	●	●	●	●	●	●
337	Ex t, Dust group III C T125 Dc, IP6X (conductive dust) acc. IEC/ EN60079-31.	-	-	-	●	●	●	●	●	●	●	●	●	●
340	Ex t, Dust group III B T125C Dc (non-conductive dust) with manufacturers declaration	-	●	●	●	●	●	●	●	●	-	-	-	-
456	Ex ec IIC T3 Gc acc. IEC/EN 60079-7 with certificates.	-	-	-	●	●	●	●	●	●	●	●	●	●
480	Ex nA II acc. to ATEX directive 2014/34/EU, temp. class T3.	-	●	●	●	●	●	●	●	●	-	-	-	-
804	DIP/Ex tD, IEC 61241, T125 ºC, IP55 (zone 22).	-	-	-	-	-	●	●	-	-	-	-	-	-
805	DIP/Ex tD, IEC 61241, T125 ºC, IP65 (zone 21).	-	-	-	-	-	●	●	-	-	-	-	-	-
Heating elements														
450	Heating element, 100-120 V	-	●	●	●	●	●	●	●	●	●	●	●	●
451	Heating element, 200 - 240 V	-	●	●	●	●	●	●	●	●	●	●	●	●
Insulation system														
014	Winding insulation class H.	-	-	-	●	●	●	●	●	●	●	●	●	●
405	Special winding insulation for frequency converter supply.	-	-	-	●	●	●	●	●	●	●	●	●	●
406	Winding insulation for supply > 690 <= 1000 volts	-	-	-	-	-	-	-	-	-	●	●	●	●
Marine														
024	Fulfilling Bureau Veritas (BV) requirements, with certificate.	-	-	-	●	●	●	●	●	●	●	●	●	●
025	Fulfilling Det Norske Veritas (DNV) requirements, with certificate.	-	-	-	●	●	●	●	●	●	●	●	●	●
026	Fulfilling Lloyds Register of Shipping (LR) requirements, with certificate.	-	-	-	●	●	●	●	●	●	●	●	●	●
027	Fulfilling American Bureau of Shipping (ABS) requirements, with certificate.	-	-	-	●	●	●	●	●	●	●	●	●	●
049	Fulfilling Germanischer Lloyd (GL) requirements, with certificate.	-	-	-	●	●	●	●	●	●	●	●	●	●
050	Fulfilling Registro Italiano Navale (RINA) requirements, with certificate.	-	-	-	●	●	●	●	●	●	●	●	●	●
051	Fulfilling Russian Maritime Register of Shipping (RS) requirements, with certificate.	-	-	-	●	●	●	●	●	●	●	●	●	●
096	Fulfilling Lloyds Register of Shipping (LR) requirements, without certificate (non-essential duty only)	-	●	●	●	●	●	●	●	●	●	●	●	●
186	Fulfilling Det Norske Veritas (DNV) requirements, without certificate	-	●	●	●	●	●	●	●	●	●	●	●	●
481	Fulfilling Nippon Kaiji Kyokai (NK) requirements, with certificate.	-	-	-	●	●	●	●	●	●	●	●	●	●
483	Fulfilling China Classification Societies (CCS) requirements (Beijing), with certificate.	-	-	-	●	●	●	●	●	●	●	●	●	●
484	Fulfilling Korea Register of Shipping (KR) requirements, with certificate.	-	-	-	●	●	●	●	●	●	●	●	●	●
491	Fulfilling Nippon Kaiji Kyokai (NK) requirements, without certificate.	-	●	●	●	●	●	●	●	●	●	●	●	●
492	Fulfilling Registro Italiano Navale (RINA) requirements, without certificate.	-	●	●	●	●	●	●	●	●	●	●	●	●
493	Fulfilling China Classification Societies (CCS) requirements (Beijing), without certificate.	-	●	●	●	●	●	●	●	●	●	●	●	●
494	Fulfilling Korea Register of Shipping (KR) requirements, without certificate.	-	●	●	●	●	●	●	●	●	●	●	●	●
496	Fulfilling Bureau Veritas (BV) requirements, without certificate(non-essential duty only)	●	●	●	●	●	●	●	●	●	●	●	●	●
497	Fulfilling Russian Maritime Register of Shipping (RS) requirements, without certificate.	-	-	-	-	-	-	-	●	●	●	●	●	●
675	Fulfilling American Bureau of Shipping (ABS) requirements, without certificate (non-essential duty only)	-	●	●	●	●	●	●	●	●	●	●	●	●
676	Fulfilling Germanischer Lloyd (GL) requirements, without certificate (non-essential duty only)	-	●	●	●	●	●	●	●	●	●	●	●	●
Mounting arrangements														
007	IM 3001 flange mounted, IEC flange, from IM 1001 (B5 from B3).	-	-	-	-	-	-	-	●	●	●	●	●	●
008	IM 2101 foot/flange mounted, IEC flange, from IM 1001 (B34 from B3).	●	●	●	●	●	●	●	●	-	-	-	-	-
009	IM 2001 foot/flange mounted, IEC flange, from IM 1001 (B35 from B3).	●	●	●	●	●	●	●	●	●	●	●	●	●
047	IM 3601 flange mounted, IEC flange, from IM 3001 (B14 from B5).	●	●	●	●	●	●	●	●	-	-	-	-	-
048	IM 3001 flange mounted, IEC flange, from IM 3601 (B5 from B14).	-	●	●	●	●	●	●	-	-	-	-	-	-
066	Modified for specified mounting position differing from IM B3 (1001), IM B5 (3001), B14 (3601), IM B35 (2001), IM B34 (2101)	-	●	●	●	●	●	●	●	●	●	●	●	●
080	(IM 3001) Flange mounted, DIN A-flange.	-	-	-	●	●	-	-	-	-	-	-	-	-

○ = Included as standard | ● = Available as option | - = Not applicable

		Frame size												
Code/Variants		**63**	**71**	**80**	**90**	**100**	**112**	**132**	**160**	**180**	**200**	**225**	**250**	**280**
090	(IM 2101) foot/flange mounted, DIN C-flange, from IM 1001 (B34 from B3).	-	-	-	●	●	-	-	-	-	-	-	-	-
091	(IM 2001) foot/flange mounted, DIN A-flange, from IM 1001 (B35 from B3).	-	-	-	●	●	-	-	-	-	-	-	-	-
093	IM 3601 flange mounted, IEC flange, from IM 1001 (B14 from B3).	-	-	-	●	●	●	-	-	-	-	-	-	-
200	Flange ring holder.	-	●	●	●	●	●	●	-	-	-	-	-	-
218	Flange ring FT 85.	-	●	●	●	-	-	-	-	-	-	-	-	-
219	Flange ring FT 100.	-	●	●	●	-	-	-	-	-	-	-	-	-
220	Flange ring FF 100.	-	●	●	●	-	-	-	-	-	-	-	-	-
223	Flange ring FF 115.	-	●	●	●	-	-	-	-	-	-	-	-	-
224	Flange ring FT 115.	-	●	●	●	-	-	-	-	-	-	-	-	-
226	Flange ring FF 130.	-	●	●	●	●	●	-	-	-	-	-	-	-
227	Flange ring FT 130.	-	●	●	●	●	●	-	-	-	-	-	-	-
229	Flange FT 130.	-	-	-	-	●	●	-	-	-	-	-	-	-
233	Flange ring FF 165.	-	-	●	●	●	●	-	-	-	-	-	-	-
234	Flange ring FT 165.	-	●	●	●	●	●	-	-	-	-	-	-	-
235	Flange FF 165.	-	-	-	●	-	-	-	-	-	-	-	-	-
236	Flange FT 165.	-	-	-	-	-	-	●	-	-	-	-	-	-
243	Flange ring FF 215.	-	-	-	-	-	●	●	-	-	-	-	-	-
244	Flange ring FT 215.	-	-	-	-	●	●	●	-	-	-	-	-	-
245	Flange FF 215.	-	-	-	-	●	●	-	-	-	-	-	-	-
253	Flange ring FF 265.	-	-	-	-	-	-	●	-	-	-	-	-	-
254	Flange ring FT 265.	-	-	-	-	-	-	●	-	-	-	-	-	-
255	Flange FF 265.	-	-	-	-	-	-	●	-	-	-	-	-	-
260	Flange FT 115.	-	-	-	●	-	-	-	-	-	-	-	-	-
313	IM 3601 flange mounted, IEC flange, from IM 2101 (B14 from B34).	-	-	-	●	●	●	-	-	-	-	-	-	-
314	IM 3001 flange mounted, IEC flange, from IM 2101 (B5 from B34).	-	-	-	●	●	●	-	-	-	-	-	-	-
317	IM 3601 flange mounted, IEC flange, from IM 2001 (B14 from B35).	-	-	-	●	●	●	-	-	-	-	-	-	-
Painting														
114	Special paint color, standard grade	●	●	●	●	●	●	●	●	●	●	●	●	●
Protection														
005	Protective roof.	●	●	●	●	●	●	●	●	●	●	●	●	●
072	Radial seal at D-end. Not possible for 2-pole , 280 and 315 frames	-	●	●	●	●	●	●	●	●	●	●	●	●
158	Degree of protection IP65.	-	●	●	●	●	●	●	●	●	●	●	●	●
211	Weather protected, IP xx W	-	●	●	●	●	●	●	●	●	●	●	●	●
250	Degree of protection IP66	-	●	●	●	●	●	●	●	●	●	●	●	●
403	Degree of protection IP56.	●	●	●	●	●	●	●	●	●	●	●	●	●
404	Degree of protection IP56, without fan and fan cover.	-	-	-	●	●	●	●	-	-	-	-	-	-
784	Gamma-seal at D-end.	-	●	●	●	●	●	●	●	●	●	●	●	●
Rating & instruction plates														
002	Restamping voltage, frequency and output, continuous duty.	●	●	●	●	●	●	●	●	●	●	●	●	●
004	Additional text on std rating plate (max 12 digits on free text line).	-	-	●	●	●	●	●	●	●	●	●	●	●
095	Restamping output (maintained voltage, frequency), intermittent duty.	●	●	●	●	●	●	●	●	●	●	●	●	●
098	Stainless rating plate.	-	●	●	●	●	●	●	●	●	●	●	●	●
126	Tag plate	-	-	-	●	●	●	●	●	●	●	●	●	●
135	Mounting of additional identification plate, stainless.	-	●	●	●	●	●	●	●	●	●	●	●	●
138	Mounting of additional identification plate, aluminium.	●	●	●	●	●	●	●	●	●	●	●	●	●
139	Additional identification plate delivered loose.	-	●	●	●	●	●	●	●	●	●	●	●	●
159	Additional plate with text “Made in ....”	●	●	●	●	●	●	●	●	●	●	●	●	●
160	Additional rating plate affixed.	-	-	-	●	●	●	●	●	●	●	●	●	●
161	Additional rating plate delivered loose.	●	●	●	●	●	●	●	●	●	●	●	●	●
163	Frequency converter rating plate. Rating data according to quotation.	-	-	-	●	●	●	●	●	●	●	●	●	●
270	Additional rating plate with standard data, delivered loose	-	●	●	●	●	●	●	●	●	●	●	●	●
332	Baldor Catalogue #	●	●	●	●	●	●	●	●	●	●	●	●	●
333	Not for use in the USA	●	●	●	●	●	●	●	●	●	●	●	●	●
818	Restamping as generator	-	-	-	-	-	-	-	●	●	●	●	●	●
Shaft & rotor														
069	Two shaft extensions according to catalog drawings.	-	-	-	●	●	●	●	●	●	●	●	●	●
070	Special shaft extension at D-End, standard shaft material	-	-	-	●	●	●	●	●	-	●	●	●	●
131	Motor delivered with half key (key not exceeding shaft diameter)	-	-	-	●	●	●	●	●	●	●	●	●	●
165	Shaft extension with open keyway	-	-	-	●	●	●	●	●	●	●	●	●	●
410	Shaft material stainless steel	-	-	-	●	●	●	●	●	●	●	●	●	●

○ = Included as standard | ● = Available as option | - = Not applicable

		Frame size												
Code/Variants		**63**	**71**	**80**	**90**	**100**	**112**	**132**	**160**	**180**	**200**	**225**	**250**	**280**
591	Special shaft extension according to customer specification.	-	-	-	●	●	●	●	●	●	●	●	●	●
600	Special shaft extension at N-end, standard shaft material.	-	-	-	●	●	●	●	-	-	-	-	-	-
Standards and Regulations														
010	Fulfilling CSA Safety Certificate.	-	-	-	●	●	●	●	●	●	●	●	●	●
011	Fulfilling CSA Energy Efficiency Verification IE3 (code 010 included).	-	-	-	-	-	-	-	●	●	●	●	●	-
208	Fulfilling Underwriters Laboratories (UL), listed requirements	-	-	-	●	●	●	●	●	●	●	●	●	●
331	IE1 motor not for sale for use in EU	-	●	●	●	●	●	●	●	●	●	●	●	●
540	China energy label	-	●	●	●	●	●	●	●	●	●	●	●	●
542	NBR design	-	-	-	-	-	-	-	●	●	●	●	●	-
543	Australian MEPS	-	-	●	●	●	●	●	●	●	●	●	●	●
544	Australian HE MEPS	-	-	-	●	●	●	●	●	●	●	●	●	-
545	China Compulsory Certificate (CCC)	-	●	●	●	-	-	-	-	-	-	-	-	-
548	Certificate of conformity according TR-CU 004/2011 for customs union RU, KZ, BY, AM, KG.	-	-	-	●	●	●	●	●	●	●	●	●	●
822	WIMES 3.03i6 Compliant Design for DOL operation	-	-	●	●	●	●	●	●	●	●	●	●	●
823	WIMES 3.03i6 Compliant Design for VSD operation	-	-	●	●	●	●	●	●	●	●	●	●	●
Stator winding temperature sensors														
120	KTY 84-130 (1 per phase) in stator winding.	-	-	-	-	-	-	-	●	●	●	●	●	●
121	Bimetal detectors, break type (NCC), (3 in series), 130 ºC, in stator winding	●	●	●	●	●	●	●	●	●	●	●	●	●
122	Bimetal detectors, break type (NCC), (3 in series), 150 ºC, in stator winding	-	●	●	●	●	●	●	●	●	●	●	●	●
123	Bimetal detectors, break type (NCC), (3 in series), 170 ºC, in stator winding	●	●	●	●	●	●	●	●	●	●	●	●	●
124	Bimetal detectors, break type (NCC), (3 in series), 140 ºC, in stator winding	-	-	-	-	-	-	-	●	●	●	●	●	●
125	Bimetal detectors, break type (NCC), (2x3 in series), 150 ºC, in stator winding	-	-	●	●	●	●	●	●	●	●	●	●	●
127	Bimetal detectors, break type (NCC), (3 in series, 130 ºC & 3 in series, 150 ºC), in stator winding	●	●	●	●	●	●	●	●	●	●	●	●	●
321	Bimetal detectors, closing type (NO), (3 in parallel), 130ºC, in stator winding.	-	-	-	●	●	●	●	-	-	-	-	-	-
322	Bimetal detectors, closing type (NO), (3 in parallel), 150ºC, in stator winding.	-	-	-	●	●	●	●	-	-	-	-	-	-
323	Bimetal detectors, closing type (NO), (3 in parallel), 170ºC, in stator winding.	-	-	-	●	●	●	●	-	-	-	-	-	-
325	Bimetal detectors, closing type (NO), (2x3 in parallel), 150ºC, in stator winding.	-	-	-	●	●	●	●	-	-	-	-	-	-
327	Bimetal detectors, closing type (NO), (3 in parallel, 130ºC & 3 in parallel, 150ºC), in stator winding.	-	-	-	●	●	●	●	-	-	-	-	-	-
435	PTC - thermistors (3 in series), 130 ºC, in stator winding	●	●	●	●	●	●	●	●	●	●	●	●	●
436	PTC - thermistors (3 in series), 150 ºC, in stator winding	●	●	●	●	●	●	●	○	○	○	○	○	○
437	PTC - thermistors (3 in series), 170 ºC, in stator winding	-	-	-	●	●	●	●	●	●	●	●	●	●
439	PTC - thermistors (2x3 in series), 150 ºC, in stator winding	●	●	●	●	●	●	●	●	●	●	●	●	●
440	PTC - thermistors (3 in series, 110ºC & 3 in series, 130ºC), in stator winding.	-	-	-	●	●	●	●	-	-	-	-	-	-
441	PTC - thermistors (3 in series, 130 ºC & 3 in series, 150 ºC), in stator winding	●	●	●	●	●	●	●	●	●	●	●	●	●
442	PTC - thermistors (3 in series, 150 ºC & 3 in series, 170 ºC), in stator winding	-	-	-	●	●	●	●	●	●	●	●	●	●
445	Pt100 2-wire in stator winding, 1 per phase	-	-	-	●	●	●	●	●	●	●	●	●	●
446	Pt100 2-wire in stator winding, 2 per phase	-	-	-	-	-	-	-	●	●	●	●	●	●
Terminal box														
015	Motor supplied in D connection.	-	●	●	●	●	●	●	●	●	●	●	●	●
016	9 terminals in terminal box	-	-	-	●	●	●	●	-	-	-	-	-	-
017	Motor supplied in Y connection.	-	-	-	●	●	-	-	●	●	●	●	●	●
019	Larger than standard terminal box.	-	-	-	-	-	-	-	-	-	●	●	●	○
021	Terminal box LHS (seen from D-end).	-	-	-	-	-	-	-	-	-	●	●	●	●
022	Cable entry LHS (seen from D-end).	-	-	-	-	-	-	-	○	○	●	●	●	●
136	Extended cable connection, standard terminal box.	-	-	-	●	●	●	●	-	-	-	-	-	-
137	Extended cable connection, low terminal box, “Flying leads”.	-	-	-	●	●	●	●	-	-	-	-	-	-
180	Terminal box RHS (seen from D-end).	-	-	-	-	-	-	-	-	-	●	●	●	●
230	Standard metal cable gland.	-	●	●	●	●	●	●	●	●	●	●	●	●
375	Standard plastic cable gland	-	●	●	●	●	●	●	-	-	-	-	-	-
376	Two standard plastic cable glands	-	-	-	●	●	●	●	-	-	-	-	-	-

○ = Included as standard | ● = Available as option | - = Not applicable

		Frame size												
Code/Variants		**63**	**71**	**80**	**90**	**100**	**112**	**132**	**160**	**180**	**200**	**225**	**250**	**280**
418	Separate terminal box for auxiliaries, standard material.	-	-	-	-	-	●	●	●	●	●	●	●	●
467	Lower than standard terminal box and rubber extended cable. Cable length 2 m	-	-	-	-	-	●	●	●	●	●	●	●	●
729	Aluminum non-drilled flange for cable glands	-	-	-	-	-	-	-	-	-	●	●	●	●
731	Two standard metal cable glands.	-	●	●	●	●	●	●	●	●	●	●	●	●
739	Prepared for metric cable glands according to DIN 42925, draft aug. 1999.	-	-	-	-	-	●	●	-	-	-	-	-	-
740	Prepared for PG cable glands.	-	-	-	-	-	●	●	●	●	●	●	●	●
Testing														
140	Test confirmation.	-	-	-	-	-	-	-	●	●	●	●	●	●
145	Type test report from a catalogue motor, 400V 50Hz.	-	●	●	●	●	●	●	●	●	●	●	●	●
146	Type test with report for one motor from specific delivery batch.	-	-	-	●	●	●	●	●	●	●	●	●	●
147	Type test with report for motor from specific delivery batch, customer witnessed.	-	-	-	●	●	●	●	●	●	●	●	●	●
148	Routine test report.	-	●	●	●	●	●	●	●	●	●	●	●	●
153	Reduced test for classification society.	●	●	●	●	●	●	●	●	●	●	●	●	●
221	Type test and multi-point load test with report for one motor from specific delivery batch.	-	-	-	●	●	●	●	●	●	●	●	●	●
222	Torque/speed curve, type test and multi-point load test with report for one motor from specific delivery batch.	-	-	-	●	●	●	●	●	●	●	●	●	●
760	Vibration level test	-	-	-	●	●	●	●	●	●	●	●	●	●
762	Noise level test for one motor from specific delivery batch.	-	-	-	●	●	●	●	●	●	●	●	●	●
763	Noise spectrum test for one motor from specific delivery batch.	-	-	-	●	●	-	-	-	-	-	-	-	-
Variable speed drives														
470	Prepared for hollow shaft pulse tacho (L&L equivalent).	-	-	-	-	-	-	-	●	●	●	●	●	●
472	1024 pulse tacho (L&L 861007455-1024).	-	-	-	-	-	-	-	●	●	●	●	●	●
473	2048 pulse tacho (L&L 861007455-2048).	-	-	-	-	-	-	●	●	●	●	●	●	●
474	Separate motor cooling (axial fan, N-end) and prepared for hollow shaft tacho (L&L equivalent)	-	-	-	-	-	-	-	●	●	●	●	●	●
476	Separate motor cooling (axial fan, N-end) and 1024 pulse tacho (L&L 861007455-1024)	-	-	-	-	-	-	-	●	●	●	●	●	●
477	Separate motor cooling (axial fan, N-end) and 2048 pulse tacho (L&L 861007455-2048)	-	-	-	-	-	-	-	●	●	●	●	●	●
570	Prepared for hollow shaft pulse tacho (L&L 503).	-	-	-	-	-	-	-	●	●	●	●	●	●
572	1024 pulse tacho (L&L 503).	-	-	-	-	-	-	-	●	●	●	●	●	●
573	2048 pulse tacho (L&L 503).	-	-	-	-	-	●	●	●	●	●	●	●	●
574	Separate motor cooling (fan axial, N-end) and prepared for hollow shaft tacho (L&L 503).	-	-	-	-	-	-	-	●	●	●	●	●	●
576	Separate motor cooling (fan axial, N-end) and 1024 pulse tacho (L&L 503).	-	-	-	-	-	-	-	●	●	●	●	●	●
577	Separate motor cooling (fan axial, N-end) and 2048 pulse tacho (L&L 503).	-	-	-	-	-	-	-	●	●	●	●	●	●
580	Separate motor cooling, IP44, 400 V, 50Hz (axial fan, N-end) and 1024 pulse tacho (L&L 503)	-	-	-	-	-	-	-	●	●	●	●	●	●
581	Separate motor cooling, IP44, 400V, 50Hz (fan axial, N-end) and 2048 pulse tacho (L&L 503).	-	-	-	-	-	-	●	●	●	●	●	●	●
588	Shaft grounding device	-	-	-	-	-	-	●	●	●	●	●	●	-
661	1024 Pulse tacho mounted, Hohner series 59, 11-30V	-	-	-	●	●	●	●	-	-	-	-	-	-
662	2048 Pulse tacho mounted, Hohner series 59, 11-30V	-	-	-	●	●	●	●	-	-	-	-	-	-
701	Insulated bearing at N-end.	-	-	-	-	-	-	-	●	●	●	●	●	●
702	Insulated bearings at both ends	-	-	-	-	-	-	-	-	-	-	-	-	-
704	EMC cable entry.	-	-	-	●	●	●	●	●	●	●	●	●	●

○ = Included as standard | ● = Available as option | - = Not applicable

Mechanical design
Motor frame and drain holes

Motor frame
The motor frame is made of aluminum alloy. Frame sizes 63 to 180 have aluminum feet and sizes 200 to 280 have cast iron feet.

The bearing end shields of sizes 63 to 132 are made of aluminum, and those of 160 to 280 are made of cast iron.

Drain holes
Motors that will be operated in very humid or wet environments and especially under intermittent duty should be provided with drain holes. The IM designation, such as IM 3031, determines the intended mounting arrangement for the motor.

Motors are provided with closable plastic plugs in the drain holes. The plugs on delivery, when mounting the motors, ensure that the drainholes face downwards. In the case of vertical mounting, the upper plug must be hammered home completely. In very dusty environments both plugs should be hammered home.

Motors are supplied with drain holes both at the D-end and N-end.

When mounting arrangement differs from foot mountedIM B3, please use variant code 066 when ordering.See variant codes 065, 066 and 076 under the heading “Drain holes”.

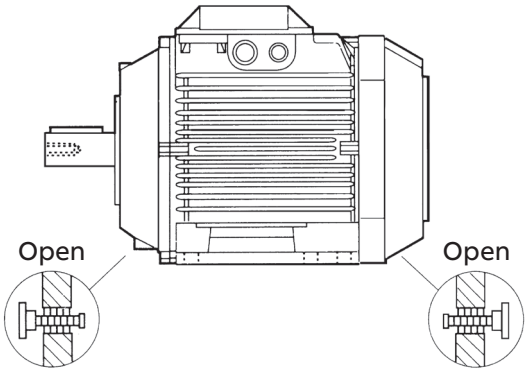

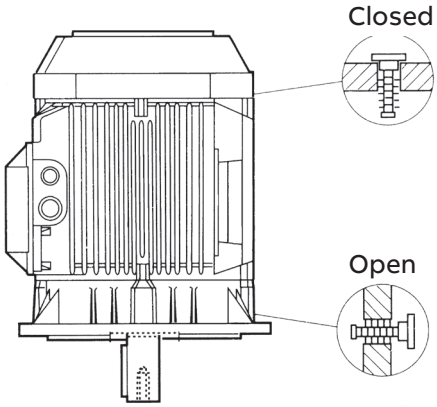

Mechanical design
Bearings

The motors are provided with bearings according to the tables below.
Greater axial forces can be tolerated if the motors are provided with angular contact ball bearings.

Standard design: deep groove ball bearings

		Foot- and flange-mounted motor	
Motor size		**D-end**	**N-end**
63		6201-2Z/C3	6201-2Z/C3
71		6203-2Z/C3	6202-2Z/C3
80		6204-2Z/C3	6203-2Z/C3
90		6205-2Z/C3	6204-2Z/C3
100		6306-2Z/C3	6205-2Z/C3
112[1)]		6306-2Z/C3	6205-2Z/C3
112[2)]		6206-2Z/C3	6205-2Z/C3
132 [3)]		6208-2Z/C3	6206-2Z/C3
132 [4)]		6308-2Z/C3	6206-2Z/C3
160		6309-2Z/C3	6209-2Z/C3
180		6310-2Z/C3	6209-2Z/C3
200		6312-2Z/C3	6210-2Z/C3
225		6313-2Z/C3	6212-2Z/C3
250		6315-2Z/C3	6213-2Z/C3
280	2 pole	6315/C3	6213/C3
280	4-8 pole	6316/C3	6213/C3

[1)]all types except
[2)]112 J-gen
[3)]all types except [4)]SM_

Note that in such cases the axial force must only operate in one direction.
Motor versions with roller bearings tolerate greater radial forces.

Alternative design with roller bearings

It is recommended to use roller bearings in belt drives for motor sizes 160 to 280.

See variant code 037 under the heading “Bearings and lubrication”.

		Foot- and flange-mounted motor	
Motor size		**D-end**	**N-end**
63		-	6201-2Z/C3
71		-	6202-2Z/C3
80		-	6203-2Z/C3
90		NU 205	6204-2Z/C3
100		NU 306	6205-2Z/C3
112[1)]		NU 306	6205-2Z/C3
112[2)]		NU 206	6205-2Z/C3
132 [3)]		NU 208	6206-2Z/C3
132 [4)]		NU 308	6206-2Z/C3
160		NU 309 ECP	6209-2Z/C3
180		NU 310 ECP	6209-2Z/C3
200		NU 312 ECP	6210-2Z/C3
225		NU 313 ECP	6212-2Z/C3
250		NU 315 ECP	6213-2Z/C3
280	2 pole	NU 315 ECP	6213/C3
280	4-8 pole	NU 316 ECP	6213/C3

[1)]all types except
[2)]112 J-gen
[3)]all types except [4)]SM_

Alternative design: angular contact ball bearings

See variant codes 058 and 059 under the heading “Bearings and lubrication”.

	D-end	N-end
Motor size	**058**	**059**
63	-	-
71	-	-
80	-	-
90	7205 B	7204 B
100	7306 B	7205 B
112[1)]	7306 B	7205 B
112[2)]	7206 B	7205 B
132 [3)]	7208 B	7206 B
132 [4)]	7308 B	7206 B
160	7309 BEP	7209 BEP
180	7310 BEP	7209 BEP
200	7312 BEP	7210 BEP
225	7313 BEP	7212 BEP
250	7315 BEP	7213 BEP
280	2 pole	7315 BEP	7213 BEP
280	4-8 pole	7316 BEP	7213 BEP

[1)]all types except
[2)]112 J-gen
[3)]all types except [4)]SM_

Transport locking

Motors provided with roller bearings or angular contact ball bearings are fitted with a transport lock to prevent damage to the bearings, due to vibration, during transport.

Axially locked bearings

The table below shows which of the motor’s bearings are axially locked in the bearing seat. In motor size 63 the locking is done by an internal

—
01 Motor sizes 71 - 132.

02 Motor sizes 160 - 250.

retaining ring, in motor sizes 71 to 280 by an inner bearing cover.

Motor size	Foot-mounted motors	Flange-mounted motors	
		Large flange	Small flange
63	On request at D-end	On request at D-end	On request at D-end
71-132	D-end [1]	D-end 1)	D-end 1)
160-280	D-end	D-end	-

[1] A spring-washer at the N-end presses the rotor toward the D-end.

Bearing seals

Motor size	Number of poles	Standard design, axial seal		Alternative design Radial seal
		D-end	N-end	
71	2-12	V-16A	Labyrinth seal	17x28x7
80	2-12	V-20A	Labyrinth seal	20x40x7
90	2-12	V-25A	Labyrinth seal	25x42x7
100	2-12	V-30A	Labyrinth seal	30x47x7
112	2-12	V-30A	Labyrinth seal	30x47x7
132	2-12	V-40A	Labyrinth seal	40x62x7
160	2-12	V-45A	V-45A	45x65x8
180	2-12	V-50A	V-45A	50x72x8
200	2-12	V-60A	V-50A	60x80x8
225	2-12	V-65A	V-60A	65x85x8
250	2-12	V-75A	V-65A	75x95x8

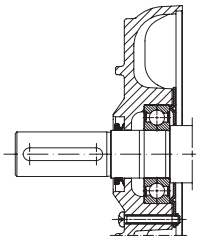

—
01

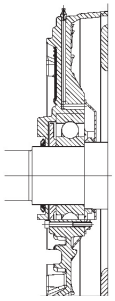

—
02

Bearing life and lubrication

Bearing life

The nominal life is defined as the number of hours that are attained or exceeded by 90 percent of identical bearings, in a large test series, under certain specified conditions.50 percent of the bearings attain a life of as much as5 times this figure.

The life of bearings is dependent on various factors such as bearing load, motor speed, operating temperature and the purity of the grease. The permissible radial and axial loading for different motor sizes is shown in the table on the following pages.

The table is valid for 50 Hz. For 60 Hz and/or some other bearing life than specified in the table the values are changed according to the table below.

The table values assume the occurrence of only radial or axial forces. In the case of simultaneous radial and axial forces information can be supplied on request. It is assumed that the radial force is applied at the end of the motor shaft.

Permissible force at changed bearing life or supply frequency

Bearing life in hours at		
50 Hz	**60 Hz**	
25 000	21 000	100 % of value for 25.000 hours
40 000	33 000	100 % of value for 40.000 hours
63 000	52 000	86 % of value for 40.000 hours
80 000	67 000	80 % of value for 40.000 hours

Lubrication

The motors are delivered with bearing grease for use at normal temperatures in dry or humid environments. The motors are lubricated for ambient temperatures 40°C and in other temperatures above 40°C, see table next page.

Motor sizes 63 to 250 are provided with shielded bearings. As an option, motor sizes 90 to 250 are provided with grease nipples for regreasing, see variant code 041 under the heading ”Bearings and lubrications”.

Motor size 280 is provided with grease nipples for re-greasing as standard.

The lubrication interval L_1, suitable for relubricated bearings, is defined as the number of operating hours after which 99 percent of the bearings are adequately lubricated.

Lubrication intervals and grease quantities are specified on a plate on the motor as well as in the manual supplied with the motor.

The grease lifetime L_{10}, suitable for permanent lubricated bearings, is defined as the number of operating hours after which 90 percent of the bearings are adequately lubricated. 50 percent of the bearings achieve two times this figure. Maximum lifetime, however, should be regarded as 40,000 hours.

In case of high ambient temperatures the shaft loads must be reduced compared to permissible loadings in the table, please contact ABB.

Lubrication intervals

ABB follows the L_1-principle in defining lubrication interval. That means that 99 percent of the motors are sure to make the interval time. The lubrication intervals can also be calculated according to the L_{10}-principle, which are normally doubled compared to L_1-values. Values available from ABB at request.

The table below gives lubrication intervals according to the L_1-principle for different speeds. The values are valid for horizontal mounted motors (B3), with about 80°C bearing temperature and using good quality grease with lithium complex soap and with mineral or PAO-oil.

For more information, see ABB’s Low Voltage Motors Manual.

Lubrication intervals for ball and roller bearings

Frame size	Amount of grease g	3600 r/min	3000 r/min	1800 r/min	1500 r/min	1000 r/min	500-750 r/min
Ball bearings: lubrication intervals in duty hours							
280	60	2000	3500	-	-	-	-
280	70	-	-	8000	10 500	14 000	17 000
Roller bearings: lubrication intervals in duty hours							
280	60	1000	1750	-	-	-	-
280	70	-	-	4000	5250	7000	8500

Grease lifetime

In vertically mounted motors, the grease lifetime is half the figures as in following table. For applications corresponding to the empty cells in the table, please contact ABB. These applications can imply reduced lifetime for bearings and winding. Motors with roller bearings (optional) have considerably shorter grease life. For continuous operation regreasing nipples should be considered.

Grease lifetime

Ambient temperature and rated output

		25 °C		40 °C		50 °C		60 °C		70 °C		80 °C	
Motor	**r/min**	**Basic**	**High**	**Basic**	**High**	**Basic**	**High**	**Basic**	**High**	**Basic**	**High**	**Basic**	**High**
63	3000	40 000	40 000	40 000	40 000	40 000	40 000	31 000	31 000	17 000	17 000	9000	9000
	1500	40 000	40 000	40 000	40 000	40 000	40 000	33 000	33 000	18 000	18 000	9000	9000
	1000	40 000	40 000	40 000	40 000	40 000	40 000	33 000	33 000	18 000	18 000	9000	9000
	750	40 000	40 000	40 000	40 000	40 000	40 000	33 000	33 000	18 000	18 000	9000	9000
71	3000	40 000	40 000	40 000	40 000	40 000	40 000	27 000	27 000	15 000	15 000	8000	8000
	1500	40 000	40 000	40 000	40 000	40 000	40 000	33 000	33 000	18 000	18 000	9000	9000
	1000	40 000	40 000	40 000	40 000	40 000	40 000	33 000	33 000	18 000	18 000	9000	9000
	750	40 000	40 000	40 000	40 000	40 000	40 000	33 000	33 000	18 000	18 000	9000	9000
80	3000	40 000	40 000	40 000	40 000	39 000	39 000	23 000	23 000	13 000	13 000	7000	7000
	1500	40 000	40 000	40 000	40 000	40 000	40 000	33 000	33 000	18 000	18 000	9000	9000
	1000	40 000	40 000	40 000	40 000	40 000	40 000	33 000	33 000	18 000	18 000	9000	9000
	750	40 000	40 000	40 000	40 000	40 000	40 000	33 000	33 000	18 000	18 000	9000	9000
90	3000	40 000	40 000	40 000	40 000	33 000	33 000	20 000	20 000	11 000	11 000	6000	6000
	1500	40 000	40 000	40 000	40 000	40 000	40 000	33 000	33 000	18 000	18 000	9000	9000
	1000	40 000	40 000	40 000	40 000	40 000	40 000	33 000	33 000	18 000	18 000	9000	9000
	750	40 000	40 000	40 000	40 000	40 000	40 000	33 000	33 000	18 000	18 000	9000	9000
100	3000	40 000	40 000	39 000	39 000	25 000	25 000	15 000	15 000	8000	8000	4000	4000
	1500	40 000	40 000	40 000	40 000	40 000	40 000	30 000	30 000	17 000	17 000	9000	9000
	1000	40 000	40 000	40 000	40 000	40 000	40 000	33 000	33 000	18 000	18 000	9000	9000
	750	40 000	40 000	40 000	40 000	40 000	40 000	33 000	33 000	18 000	18 000	9000	9000
112[1)]	3000	40 000	40 000	39 000	39 000	25 000	25 000	15 000	15 000	8000	8000	4000	4000
	1500	40 000	40 000	40 000	40 000	40 000	40 000	30 000	30 000	17 000	17 000	9000	9000
	1000	40 000	40 000	40 000	40 000	40 000	40 000	33 000	33 000	18 000	18 000	9000	9000
	750	40 000	40 000	40 000	40 000	40 000	40 000	33 000	33 000	18 000	18 000	9000	9000
112[2)]	3000	40 000	40 000	40 000	40 000	40 000	30 000	26 000	17 000				
	1500	40 000	40 000	40 000	40 000	40 000		27 000					
	1000	40 000	40 000	40 000	35 000	40 000		40 000					
	750	40 000	40 000	40 000	35 000	40 000		40 000					
132 [3)]	3000	40 000	40 000	33 000	33 000	21 000	21 000	13 000	13 000	7000	7000	4000	4000
	1500	40 000	40 000	40 000	40 000	40 000	40 000	26 000	26 000	14 000	14 000	7000	7000
	1000	40 000	40 000	40 000	40 000	40 000	40 000	33 000	33 000	18 000	18 000	9000	9000
	750	40 000	40 000	40 000	40 000	40 000	40 000	33 000	33 000	18 000	18 000	9000	9000
132 [4)]	3000	40 000	40 000	31 000	31 000	20 000	20 000	12 000	12 000	6000	6000	3000	3000
	1500	40 000	40 000	40 000	40 000	40 000	40 000	24 000	24 000	13 000	13 000	7000	7000
	1000	40 000	40 000	40 000	40 000	40 000	40 000	33 000	33 000	18 000	18 000	9000	9000
	750	40 000	40 000	40 000	40 000	40 000	40 000	33 000	33 000	18 000	18 000	9000	9000
160	3000	40 000	40 000	40 000	36 000	40 000	19 000	26 000	9000	14 000	5000	8000	2000
	1500	40 000	40 000	40 000	40 000	40 000	40 000	40 000	38 000	40 000	20 000	37000	10 000
	1000	40 000	40 000	40 000	40 000	40 000	40 000	40 000	40 000	40 000	24 000	40 000	12 000
	750	40 000		40 000		40 000		40 000		40 000		40 000	
180	3000	38 000	38 000	38 000	38 000	38 000	38 000	38 000	23 000	23 000	12 000	13 000	7000
	1500	40 000	40 000	40 000	40 000	40 000	24 000	40 000	12 000	26 000	6000	13 000	3000
	1000	40 000	40 000	40 000	40 000	40 000	40 000	40 000	40 000	40 000	24 000	29 000	12 000
	750	40 000		40 000		40 000		40 000		37000		21 000	
200	3000	27 000	27 000	27 000	27 000	27 000	18 000	24 000	10 000	14 000	5000	8000	3000
	1500	40 000	40 000	40 000	40 000	40 000	40 000	40 000	32000	40 000	18 000	30 000	10 000
	1000	40 000	40 000	40 000	40 000	40 000	40 000	40 000	40 000	40 000	30 000	38 000	17 000
	750	40 000		40 000		40 000		40 000		40 000		40 000	

[1)] all types except [2)]112 J-gen
[3)]all types except [4)]SM_

Grease lifetime

Ambient temperature and rated output													
		25 °C		40 °C		50 °C		60 °C		70 °C		80 °C	
Motor	r/min	Basic	High	Basic	High	Basic	High	Basic	High	Basic	High	Basic	High
225	3000	23 000	23 000	23 000	18 000	23 000	10 000	20 000	6000	12 000	3000	7000	1000
	1500	40 000	40 000	40 000	40 000	40 000	23 000	40 000	12 000	40 000	6000	25 000	3000
	1000	40 000	40 000	40 000	40 000	40 000	40 000	40 000	40 000	40 000	40 000	40 000	27 000
	750	40 000		40 000		40 000		40 000		40 000		40 000	
250	3000	16 000	16 000	16 000	13 000	16 000	7000	12 000	4000	7000	2000	4000	1000
	1500	40 000	40 000	40 000	39 000	40 000	21 000	40 000	11 000	33 000	6000	19 000	3000
	1000	40 000	40 000	40 000	40 000	40 000	40 000	40 000	40 000	40 000	25 000	36 000	13 000
	750	40 000		40 000		40 000		40 000		40 000		40 000	

[1)] all types except [2)]112 J-gen
[3)]all types except [4)]SM_

Grease lifetime L_{10} in deep groove ball bearings of type 2Z in horizontally mounted motors in continuous running duty.

Mechanical design
Radial forces

Permissible loading on shaft
The tables give the permissible radial force in Newtons, assuming zero axial force, ambient temperature of 25°C.

Permissible loads of simultaneous radial and axial forces will be supplied on request.

The bearing life, L_{10}, is calculated according to SKF's theory on bearing life L_{10aah}, which also takes the purity of the grease into consideration. An adequate lubrication is a necessary prerequisite for the table at right.

If the radial force is applied between points X_0 and X_{max}, the permissible force F_R can be calculated from the following formula:

$$F_R = F_{X0} - \frac{X}{E}(F_{X0} - F_{Xmax})$$

Where:	
E:	length of the shaft extension in the standard version

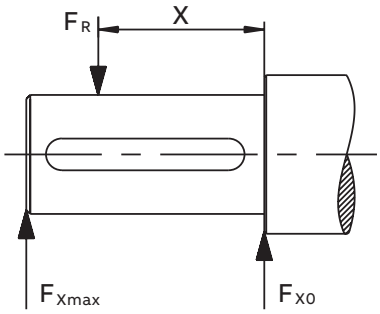

Permissible radial forces

Motor size	Poles	Length of shaft extension E (mm)	Ball bearings Basic design with deep groove ball bearings			
			25000 hours		40000 hours	
			F_{x0} (N)	F_{Xmax} (N)	F_{x0} (N)	F_{Xmax} (N)
63	2-8	23	490	400	490	400
71	2-8	30	680	570	680	570
80	2	40	630	750	930	750
80	4-8	40	930	750	930	750
90	2-8	50	1010	810	1010	810
100	2-8	60	2280	1800	2280	1800
112	2-8	60	2280	1800	2280	1800
112[1)]	2-6	60	1770	1430	1560	1260
132[2)]	2-8	80	2120	1610	2120	1610
132[3)]	2-8	80	2600	2100	2600	2100

[1)] 112 J-gen
[2)] 62-series bearings
[3)] 63-series bearings

Motor size	Poles	Length of shaft extension E (mm)	Ball bearings Basic design with deep groove ball bearings				Roller bearings Alternative design with roller bearings			
			20 000 hrs		40 000 hrs		20 000 hrs		40 000 hrs	
			F_{x0}(N)	F_{Xmax}(N)	F_{x0}(N)	F_{Xmax}(N)	F_{x0}(N)	F_{Xmax}(N)	F_{x0}(N)	F_{Xmax}(N)
160	2	110	4760	3860	4100	3320	6580	4300	5620	4300
	4	110	5180	4200	4380	3545	7340	4300	6180	4300
	6	110	5160	4180	4360	3540	7780	4300	6500	4300
	8	110	6280	4300	5320	4300	8860	4300	7440	4300
180	2	110	6060	4960	5280 [1)]	4305 [1)]	7600	5500	6560	5500
	4	110	4800	3940	4020	3300	7280	5500	6140	5500
	6	110	6280	5140	5280	4380	8680	5500	7280	5500
	8	110	6960	5500	5880	4800	9440	5500	7920	5500
200	2	110	7800	6500	6760 [2)]	5640 [2)]	10 360	8640	8880	7400
	4	110	8400	7020	7180	5980	11 560	9550	9800	8180
	6	110	8960	7480	7600	6340	12 480	9550	10 520	8780
	8	110	10480	8740	8940	7400	14 100	9550	11 920	9550
225	2	110	8520	7180	7360 [3)]	6200 [3)]	12 320	10 380	10 560	8900
	4	140	8380	6780	7200	5820	13 380	10 250	11 320	9160
	6	140	10 960	8860	9360	7560	15 860	10 250	13 420	10 250
	8	140	12 100	9780	10 340	8360	17 220	10 250	14 580	10 250
250	2	140	10 480 4)	8500 4)	9080 [4)]	7360 [4)]	16 220	10 900	13 960	10 900
	4	140	10 840	8780	9380	7600	18 020	13 800	15 320	13 800
	6	140	12 600	10 220	10 700	8680	20 240	13 800	17 140	13 800
	8	140	14 660	11 880	12 540	10 160	22 680	13 800	19 220	13 800
280	2	140	6780	5500	5680	4600	16 280	13 200	14 000	11 360
	4	140	8060	6540	6640	5380	19 480	15 780	16 540	13 400
	6	140	8980	7280	7360	5960	21 920	17 760	18 580	15 060
	8	140	9180	7460	7460	6060	22 240	18 020	18 860	15 300

[1)] The maximum lifetime of the grease is 38000 h
[2)] The maximum lifetime of the grease is 27000 h
[3)] The maximum lifetime of the grease is 23000 h
[4)] The maximum lifetime of the grease is 16000 h

Mechanical design
Axial forces

—
01 Mounting arrangement IM B3.

02 Mounting arrangement IM V1.

The following tables present permissible axial forces on the shaft in Newtons, assuming zero radial force, a 25 °C ambient temperature, and normal conditions. The values are given for a calculated bearing life of 20,000 and 40,000 hours per motor size.

At 60 Hz, the values must be reduced by 10 percent, and for two-speed motors, the higher speed determines permissible axial force. Permissible loads of simultaneous radial and axial forces can be supplied on request.

For axial force F_{AD}, it is assumed that the D-bearing is locked with a locking ring.

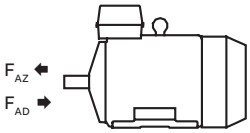

—
01

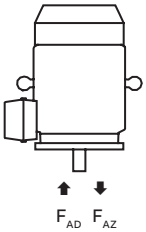

—
02

Permissible axial forces

Motor size	Poles	Mounting arrangement IM B3, deep groove ball bearings				Mounting arrangement IM V1, deep groove ball bearings			
		20 000 hours		40 000 hours		20 000 hours		40 000 hours	
		F_{AD} (N)	F_{AZ} (N)	F_{AD} (N)	F_{AZ} (N)	F_{AD} (N)	F_{AZ} (N)	F_{AD} (N)	F_{AZ} (N)
63	2	480	125	420	105	495	115	440	95
	4	565	165	470	115	585	155	490	105
	6	580	190	490	145	600	180	550	115
	8	590	195	590	205				
71	2	625	325	515	215	640	315	530	200
	4	780	480	630	330	800	470	650	320
	6	890	590	710	410	925	570	745	390
	8	985	685	780	480	1020	665	815	455
80	2	810	470	650	315	845	450	690	290
	4	1015	675	810	470	1075	640	865	430
	6	1170	830	925	595	1225	795	980	550
	8	1300	960	1015	675	1350	925	1070	645
90	2	885	485	720	320	945	450	775	280
	4	1170	650	945	425	1245	600	1020	375
	6	1270	870	1005	605	1360	815	1095	550
	8	1410	1010	1110	710	1485	960	1185	660
100	2	1620	1120	1280	780	1710	1060	1370	715
	4	2065	1565	1615	1115	2180	1485	1735	1035
	6	2390	1890	1860	1360	2510	1815	1980	1285
	8	2660	2160	2065	1565	2780	2080	2185	1485

Permissible axial forces

Motor size	Poles	Mounting arrangement IM B3, deep groove ball bearings				Mounting arrangement IM V1, deep groove ball bearings			
		20 000 hours		40 000 hours		20 000 hours		40 000 hours	
		F_{AD} (N)	F_{AZ} (N)	F_{AD} (N)	F_{AZ} (N)	F_{AD} (N)	F_{AZ} (N)	F_{AD} (N)	F_{AZ} (N)
112 M, MB	2	1615	1115	1275	775	1725	1040	1385	700
	4	2060	1560	1610	1110	2210	1460	1110	1010
	6	2385	1885	1860	1360	2540	1785	2010	1260
	8	2655	2155	2060	1560	2790	2055	2195	1475
112 J-gen	2	1500	1000	1160	660	1610	1010	1260	675
	4	1600	1100	2160	760	2100	1430	985	885
	6	1720	1220	1380	880	2430	1760	1885	1135
	8	1760	1260	1420	920	2880	1740	2075	1325
132 M, MA	4	2245	1645	1760	1160	2460	1505	1970	1015
	6	2595	1980	2025	1425	2815	1850	2245	1280
	8	2875	2270	2240	1640	3130	2115	2490	1470
132 MC	6	2580	1980	2010	1410	2885	1780	2315	1210
132 MBA	4	2235	1635	1750	1150	2495	1465	2010	980
132 S	6	2600	2000	2030	1435	2780	1885	2210	1315
	8	2885	2285	2245	1645	3100	2145	2460	1505
132 SB	2	1760	1160	1400	800	1910	1075	1540	705
132 SBB, SC	2	1760	1160	1395	795	1945	1045	1575	670
132 SMB, SMC	2	2210	1610	1740	1140	2435	1470	1950	985
	4	2840	2240	2205	1605	3150	2035	2515	1400
132 SMD	4	2830	2200	2230	1595	3195	1995	2560	1355
132 SME	2	2210	1610	1730	1130	2490	1425	2005	940
160	2	4160	4160	3425	3425	4560	3810	3860	3110
	4	4740	4740	3920	3920	5260	4310	4440	3490
	6	4840	4840	4000	4000	5400	4420	4540	3560
	8	5980	5980	4920	4920	6560	5580	5460	4480
180	2	5480	5480	4600 [1]	4600 [1]	5920	5115	5060 [1]	4255 [1]
	4	4360	4360	3540	3540	5080	3860	4240	3020
	6	5980	5980	4940	4630	6000	5445	5600	4385
	8	6000	6620	5460	5460	6000	6120	6000	4900
200	2	5000	6880	5000 [2]	5700 [2]	5000	6350	5000 [2]	5230 [2]
	4	5000	7660	5000	6340	5000	6950	5000	5650
	6	5000	8300	5000	6880	5000	7505	5000	6025
	8	5000	9880	5000	8160	5000	9215	5000	7435
225	2	5000	7380	5000 [3]	6120 [3]	5000	6770	5000 [3]	5490 [3]
	4	5000	7600	5000	6220	5000	6795	5000	5475
	6	5000	10140	5000	8420	5000	9270	5000	7490
	8	5000	11 420	5000	9460	5000	10 595	5000	8535
250	2	6000 [4]	9020 [4]	6000 [4]	7500 [4]	6000 [4]	8335 [4]	6000 [4]	6755 [4]
	4	6000	9800	6000	8040	6000	8820	6000	7120
	6	6000	11520	6000	9520	6000	10 275	6000	8235
	8	6000	13 700	6000	11 380	6000	12 645	6000	10 205
280	2	5260	5260	4220	4220	6400	4400	5420	3420
	4	6500	6500	5160	5160	7920	5400	6640	4120
	6	7500	7500	6040	6040	8500	6180	7840	4640
	8	7740	7740	6180	6180	8500	6435	7980	4775

[1] The maximum lifetime of the grease is 38 000 h
[2] The maximum lifetime of the grease is 27 000 h
[3] The maximum lifetime of the grease is 23 000 h
[4] The maximum lifetime of the grease is 16 000 h

Mechanical design
Terminal box

Sizes 63 to 180
The terminal box is made of aluminum alloy and is located on top of the stator. The lower part of the box is integrated with the stator. It is provided with two knockout openings on each side. Sizes 132 SM_ and 160 - 180 also have a third smaller opening. Cable glands are not included.

Sizes 200 to 280
The terminal box and cover are made of deep drawn steel and mounted on top of the stator. The box is bolted to the stator and is not rotatable. The size of the box is the same for all frame sizes.

The motors can also be provided with an extra large terminal box, standard for voltage code S and frame size 280. See variant code 019 under the heading “Terminal box”. This will increase the dimension HD by 32 mm. The box is supplied with two FL 21 openings. The right opening is provided with a flange with two holes for M63 cable glands. The holes are sealed by means of plastic plugs. Cable glands are not supplied. The opening on the other side is provided with a cover flange. The box can also be provided with an FL 13 opening towards the N-end.

When new motors are manufactured the terminal box can be mounted on the left or the right side. See variant codes 021 and 180 under the heading “Terminal box”.

In the basic design the terminal box is provided with twoFL 13 flange openings, one on each side. The opening on the right side, seen from the D-end, is supplied with a flange with two holes for M40 cable glands. On delivery the holes are sealed by means of plastic plugs. Cable glands are not supplied. The opening on the other side is provided with a cover flange.

Dimensions for terminal box

	Dimensions		
Motor size	**HB**	**HD**	**HE**
Code 019: Larger than standard terminal box			
200 ML	332.5	603	240
225 SM	353	578	260.5
250 SM	376	626	283.5
Code 021: Terminal box on left-hand side seen from D end			
Code 180: Terminal box on right-hand side seen from D end			
200 ML	332	532	239
225 SM	354	579	260.5
250 SM	377	627	284
Code 467: Lower than standard terminal box without screw terminals and extended rubber connection cable 2 m.			
160	211.5	371.5	
180	226.5	406.5	
200 ML	248	448	
225 SM	269	494	
250 SM	292	542	
280	292	572	

Refer to the Dimension drawings section for dimensions HB, HD and HE.

—
01 Terminal board for motor sizes 63 to 80.

02 Terminal board for motor sizes 90 to 112.

03 Terminal board for motor size 132.

04 Terminal board for motor sizes 160 to 180 in G-generation.

05 Terminal board for motor sizes 160 to 200 in L-generation.

06 Terminal board for motor sizes 200 to 280 in G-generation.

07 Terminal board for motor sizes 225 to 280 in L-generation.

Connections

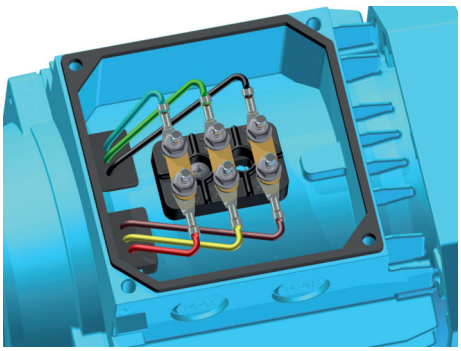

—
01

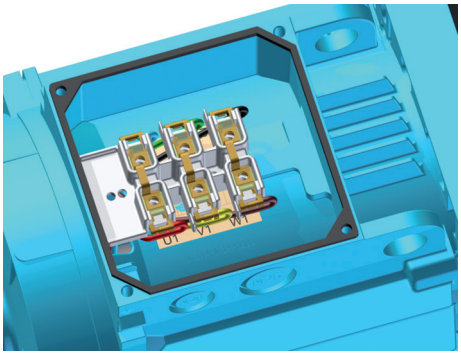

—
02

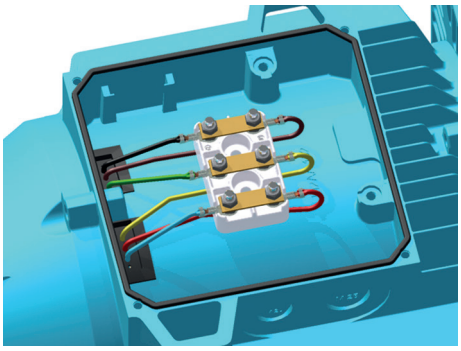

—
03

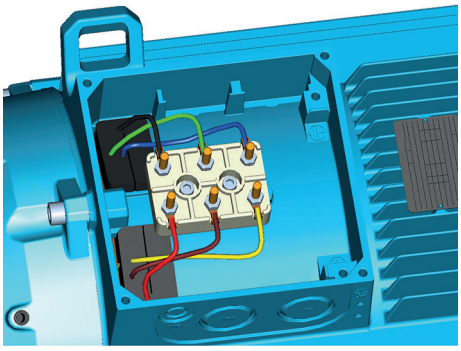

—
04

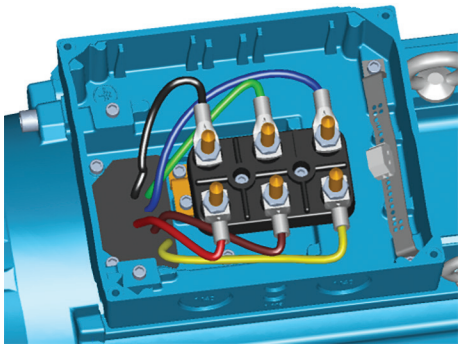

—
05

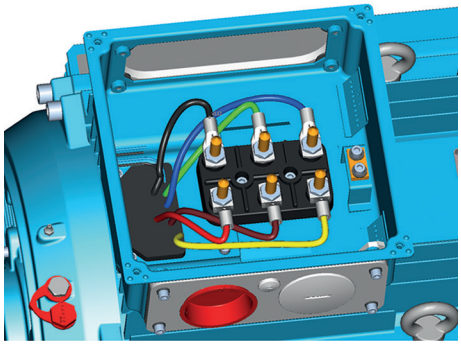

—
06

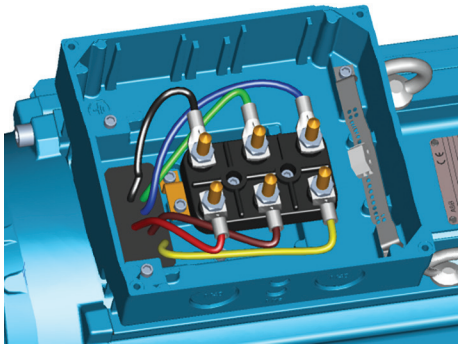

—
07

The terminal block is provided with six terminals for connecting Cu-cable.
The terminals are marked in accordance with IEC 60034-8.

Connection openings

Motor size	Opening	Metric cable entry	Method of connection	Terminal bolt size	Maximum connectable Cu-cable area, mm ^{2}
63	Knock-out opening	1 x M16 x 1.5 1 x Pg 11	Cable lug	M4	2.5
71-80	Knock-out opening	2 x (2 x M20)	Cable lug	M4	4
90-112	Knock-out opening	2 x (M25 + M20)	Screw terminal	M4	6
132 [1)]	Knock-out opening	2 x (M25 + M20)	Cable lug	M5	10
132 [2)]	Knock-out opening	2 x (M40 x M32 + M12)	Cable lug	M6	35
160-180	Knock-out opening	2 x (2 x M40) + M16	Cable lug	M6	35
200-250	2 x FL 13	1 x (2 x M40 + M16)	Cable lug	M10	70
280	2 x FL 21	1 x (2 x M63 + M16)	Cable lug	M10	70

[1)]all types except [2)]
[2)]SM_

Dimension drawings

Process performance IE2 aluminum motors

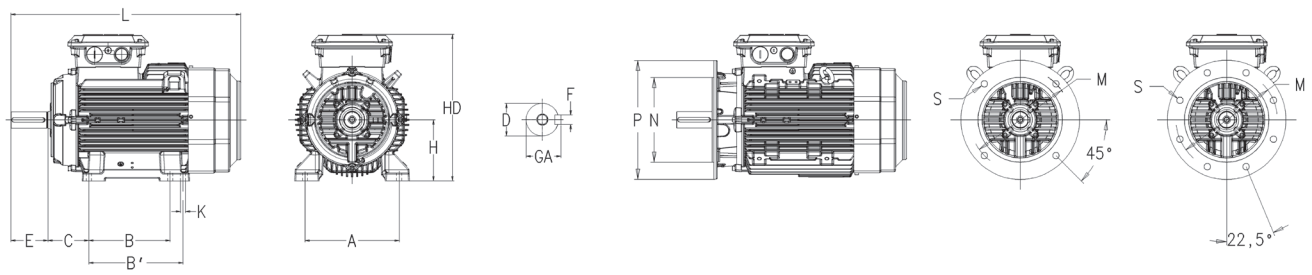

Foot-mounted motor IM1001, B3 and flange-mounted motor IM3001, B5

Motor size	Poles	D	GA	F	E	L max	A	B	B1	C	HD	K	M	N	P	S
63		11	12.5	4	23	217	100	80		40	169	7	100	80	120	7
71		14	12.5	5	30	240	112	90		45	180	7	130	110	160	10
80		19	21.5	6	40	265.5	125	100		50	193.5	10	165	130	200	12
90	S 8	24	27	8	50	284.5	140	125		56	217	10	165	130	200	12
90	L2, L8, LB 2-8	24	27	8	50	309.5	140	125		56	217	10	165	130	200	12
90	LD 4-6	24	27	8	50	331.5	140	125		56	217	10	165	130	200	12
100	LB2, LC 4-8, LA8, LB8	28	31	8	60	351	160	140		63	237	12	215	180	250	15
100	LD 4	28	31	8	60	373	160	140		63	237	12	215	180	250	15
112		28	31	8	60	393	190	140		70	249	12	215	180	250	15
132	SB2, M4, MA4, MBA4	38	41	10	80	447	216	140	178	89	295.5	12	265	230	300	14.5
132	SC2, MC6	38	41	10	80	487	216	140	178	89	295.5	12	265	230	300	14.5
132	SM_	38	41	10	80	550	216	140	178	89	321	12	265	230	300	14.5
160	MLA 2-8, MLB2, MLB8	42	45	12	110	584	254	210	254	108	370	15	300	250	350	19
160	MLB 4-6, MLC 2-8, MLD 2-4	42	45	12	110	681	254	210	254	108	370	15	300	250	350	19
180		48	51.5	14	110	726	279	241	279	121	405	15	300	250	350	19
200		55	59	16	110	821	318	267	305	133	532	18	400	350	400	19
225		55	59	16	110	850	356	286	311	149	579	18	400	350	450	19
225		60	63	18	140	880	356	286	311	149	579	18	400	350	450	19
250		60	64	18	140	884	406	406	349	168	627	22	500	450	550	19
250		65	69	18	140	884	406	406	349	168	627	22	500	450	550	19
280		65	69	18	140	884	457	457	419	190	657	24	500	450	550	19
280		75	79.5	20	140	884	457	457	419	190	657	24	500	450	550	19

IMB14 (IM3601)

Motor size	M	N	P	S	Motor size	M	N	P	S
63	75	60	90	5	100	130	110	160	8
71	85	70	105	6	112	130	110	160	8
80	100	80	120	6	132	165	130	200	10
90	115	95	140	8	132SM_	165	130	200	10

Tolerances		Tolerances	
A, B	±0,8	F	ISO h9
D	ISO j6 ≤ Ø 28 mm	H	-0,5
	ISO k6 < Ø 38 mm	N	ISO js6
	ISO m6 ≥ Ø 55 mm	C	±0,8

The table gives the main dimension in mm. For detailed drawings please see our web pages www.abb.com/motors&generators.

Dimension drawings

Process performance IE3 aluminum motors, J/L-generation

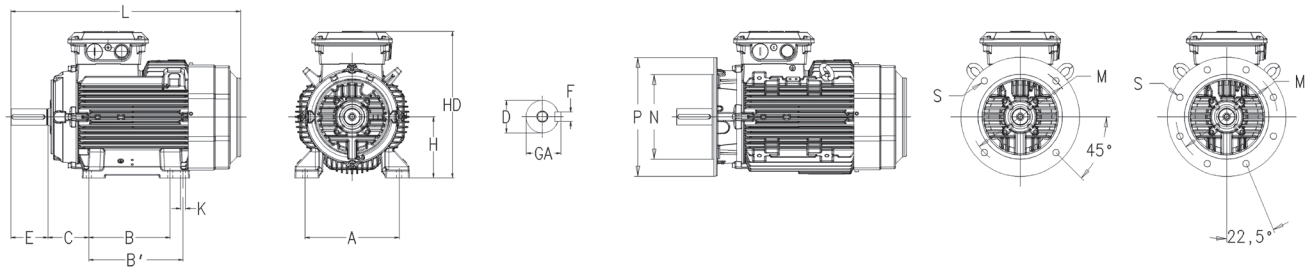

Foot-mounted motor IM1001, B3 and flange-mounted motor IM3001, B5

Motor size	Poles	D	GA	F	E	L max	A	B	B1	C	HD	K	M	N	P	S
80	B 2, C2	19	21.5	6	40	265.5	125	100		50	193.5	10	165	130	200	12
80	E 4	19	21.5	6	40	293	125	100		50	193.5	10	165	130	200	12
90	L2, L8, LB2-8	24	27	8	50	309.5	140	125		56	217	10	165	130	200	12
90	LD4-6	24	27	8	50	331.5	140	125		56	217	10	165	130	200	12
100	LC4	28	31	8	60	351	160	140		63	237	12	215	180	250	15
100	LB2, LC6, LD 4	28	31	8	60	393	160	140		63	237	12	215	180	250	15
112	MB2	28	31	8	60	390	190	140		70	258	12	215	180	250	15
112	MB4-6	28	31	8	60	410	190	140		70	258	12	215	180	250	15
132	S6, M4, MA4	38	41	10	80	447	216	140	178	89	295.5	12	265	230	300	14.5
132	SB2, SC2, MA6, MC6	38	41	10	80	487	216	140	178	89	295.5	12	265	230	300	14.5
160	MLA2	42	45	12	110	584	254	210	254	108	370	15	300	250	350	19
160	MLB2, MLC2, 4-6 p	42	45	12	110	681	254	210	254	108	370	15	300	250	350	19
180		48	51.5	14	110	681	279	241	279	121	390	15	300	250	350	19
200		55	59	16	110	726	318	267	305	133	425	18	400	350	400	19
225	2 pole	55	59	16	110	821	356	286	311	149	531	18	400	350	450	19
225	4-6 poles	60	64	18	140	851	356	286	311	149	531	18	400	350	450	19
250	2 pole	60	64	18	140	880	406	311	349	168	578	22	500	450	550	19
250	4-6 poles	65	69	18	140	880	406	311	349	168	578	22	500	450	550	19
280	2 pole	65	69	18	140	884	457	457	419	190	631	24	500	450	550	19
280	4-6 poles	75	79.5	20	140	884	457	457	419	190	631	24	500	450	550	19

IMB14 (IM3601)

Motor size	M	N	P	S	Motor size	M	N	P	S
80	100	80	120	6	112	130	110	160	8
90	115	95	140	8	132	165	130	200	10
100	130	110	160	8					

Tolerances		Tolerances	
A, B	±0,8	F	ISO h9
D	ISO j6 ≤ Ø 28 mm	H	-0,5
	ISO k6 < Ø 38 mm	N	ISO js6
	ISO m6 ≥ Ø 55 mm	C	±0,8

The table gives the main dimension in mm. For detailed drawings please see our web pages www.abb.com/motors&generators.

Dimension drawings

Process performance IE3 aluminum motors, K-generation

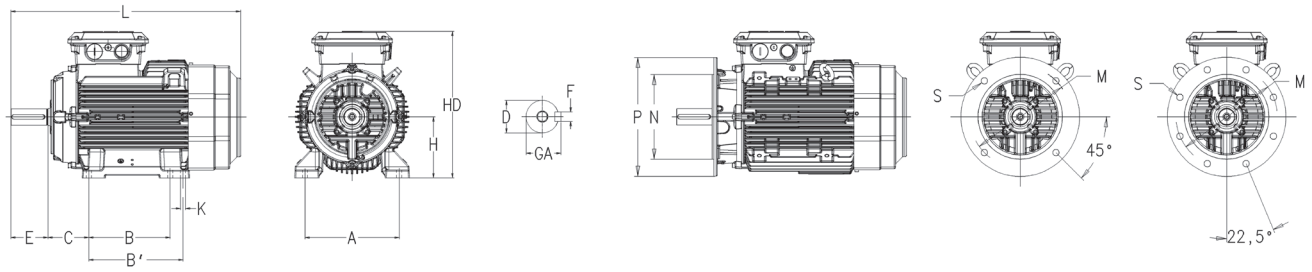

Foot-mounted motor IM1001, B3 and flange-mounted motor IM3001, B5

Motor size	Poles	D	GA	F	E	L max	A	B	B1	C	HD	K	M	N	P	S
80	MB2, MC2	19	21.5	6	40	265.5	125	100		50	193.5	10	165	130	200	12
80	ME4	19	21.5	6	40	293.5	125	100		50	193.5	10	165	130	200	12
90	2-6	24	27	8	50	331.5	140	125		56	217	10	165	130	200	12
100	2-6	28	31	8	60	432	160	140		63	237	12	215	180	250	15
112	2-6	28	31	8	60	431	190	140		70	260	12	215	180	250	15
132	2-6	38	41	10	80	487	216	140	178	89	298	12	265	230	300	14.5
160	2-6	42	45	12	110	681	254	210	254	108	370	15	300	250	350	19
180	2-6	48	51.5	14	110	726	279	241	279	121	405	15	300	250	350	19
200	2-6	55	59	16	110	821	318	267	305	133	532	18	400	350	400	19
225	2	55	59	16	110	850	356	286	311	149	553	18	400	350	450	19
225	4-6	60	64	18	140	880	356	286	311	149	553	18	400	350	450	19
250	2	60	64	18	140	884	406	311	349	168	601	22	500	450	550	19
250	4-6	65	69	18	140	884	406	311	349	168	601	22	500	450	550	19

IMB14 (IM3601)

Motor size	M	N	P	S	Motor size	M	N	P	S
80	100	80	120	6	112	130	110	160	8
90	115	95	140	8	132	165	130	200	10
100	130	110	160	8					

Tolerances		Tolerances	
A, B	±0,8	F	ISO h9
D	ISO j6 ≤ Ø 28 mm	H	-0,5
	ISO k6 < Ø 38 mm	N	ISO js6
	ISO m6 ≥ Ø 55 mm	C	±0,8

The table gives the main dimension in mm. For detailed drawings please see our web pages www.abb.com/motors&generators.

Accessories

Slide rails for motor sizes 160 to 280

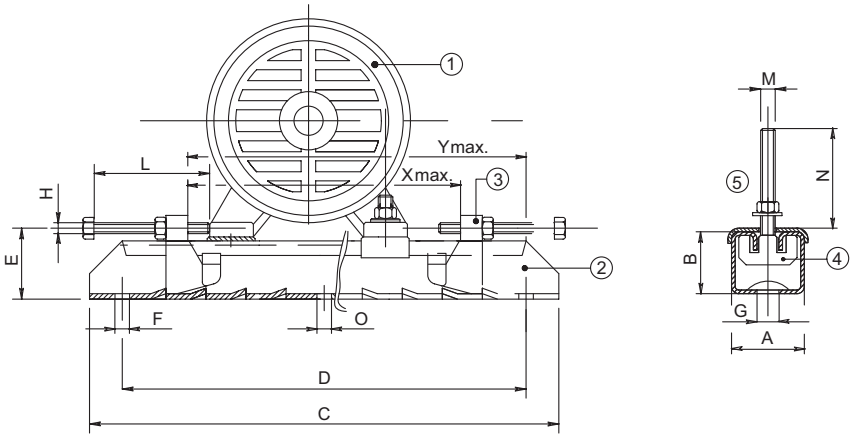

1 Motor | 2 Rail | 3 Movable adjusting bolt | 4 Fixing bolt, motor | 5 Plate

Motor size	Type	Product code 3GZV103001-	A	B	C	D	E	F	G	H	L	M	N	O		Ymax	Weight (kg)
[1]																	
160-180	TT180/12	-14	75	42	700	630	57	17	26	M12	120	M12	50	-	520	580	12.0
200-225	TT225/16	-15	82	50	864	800	68	17	27	M16	140	M16	65	17	670	740	20.4
250-280	TT280/20	-16	116	70	1072	1000	90	20	27	M18	150	M20	80	20	870	940	43.0

[1] Smaller sizes on request.

Each set includes two complete slide rails including screw for mounting the motor on the rails. Screws for mounting the rails on the foundation are not included. Slide rails are supplied with unmachined lower surfaces and should, prior to tightenng down, be supported in a suitable manner.

Motors in brief

Aluminum motors, sizes 63 - 132

Motor size	M3AA	63	71	80	90	100	112	132
Stator and end shields	Material	Die-cast aluminum alloy						
	Paint colour shade	Munsell blue 8B 4.5/3.25						
	Corrosion class	C3 medium according IEO/EN 12944-5						
Feet		Separate bolt on feet	Integrated aluminum feet					
Bearings	D-end	6201-2Z/C3	6203-2Z/C3	6204-2Z/C3	6205-2Z/C3	6306-2Z/C3	6306-2Z/C3	6208-2Z/C3 6206-2Z/C3 (J) 6308-2Z/C3 (SM)
	N-end	6201-2Z/C3	6202-2Z/C3	6203-2Z/C3	6204-2Z/C3	6205-2Z/C3	6205-2Z/C3	6206-2Z/C3
Axially-locked bearings	Inner bearing cover	ND-end re-taining ring	Locked at D-end					
Bearing seal	D-end	V-ring						
	N-end	Labyrinth seal						
Lubrication		Permanent grease lubrication. Grease temperature range -40°C to +160°C						
Measuring nipples for condition monitoring of the bearings		Not included						
Rating plate	Material	Aluminum						
Terminal box	Material	Die-cast aluminum alloy, integrated to stator						
	Cover screws material	Zinc-electroplated steel						
Connections	Openings	1xM16	2x(M20 + M20)	2x(M20 + M20)	2x(M20+M25)			2x(M20+M25) [1] 2x(M40+M32+M12) [2]
	Terminals	6 terminals for connection with cable lugs (not included)						
	Cable glands	Optional						
Fan	Material	Glass-fiber reinforced polypropylene						
Fan cover	Material	Polypropylene						
	Paint colour shade	Munsell blue 8B 4.5/3.25						
	Corrosion class	C3 medium according IEO/EN 12944-5						
Stator winding	Material	Copper						
	Insulation	Insulation class F						
	Winding protection	Optional						
Rotor winding	Material	Die-cast aluminum						
Balancing		Half key balancing						
Key ways		Closed key way						
Drain holes		Without drain holes	Drain holes with closable plastic plugs, open on delivery					
External earthing bolt		As option						
Enclosure		IP 55						
Cooling method		IC 411						

[1] S, SB, M, MA
[2] SC, MC, SMA-SME

Motors in brief

Aluminum motors, sizes 160 - 280

Motor size	M3AA	160	180	200	225	250	280
Stator and end shields	Material	Die-cast aluminum alloy		Extruded aluminum alloy			
	Paint colour shade	Munsell blue 8B 4.5/3.25					
	Corrosion class	C3 medium according IEO/EN 12944-5					
Feet		Separate aluminum feet		Separate cast iron feet			
Bearings	D-end	6309-2Z/C3	6310-2Z/C3	6312-2Z/C3	6313-2Z/C3	6315-2Z/C3	6316/C3
	N-end	6209-2Z/C3	6209-2Z/C3	6210-2Z/C3	6212-2Z/C3	6213-2Z/C3	6213/C3
Axially-locked bearings	Inner bearing cover	Locked at D-end					
Bearing seal	D-end	Axial seal					
	N-end	Axial seal					
Lubrication		Permanently lubricated shielded bearings					Regreasable
Measuring nipples for condition monitoring of the bearings		Not included					
Rating plate	Material	Aluminum					
Terminal box	Material	Die-cast aluminum alloy, integrated to stator		Deep-drawn steel sheet, bolted to stator			
	Cover screws material	Zinc-electroplated steel					
Connections	Openings	(2xM40+M16+(2xM40)		2xFL13, 2xM40 + 1xM16			2xFL21
		Knock-out					
	Terminals	6 terminals for connection with cable lugs (not included)					
	Cable glands	Optional					
Fan	Material	Glass-fiber reinforced polypropylene					
Fan cover	Material	Steel					
	Paint colour shade	Munsell blue 8B 4.5/3.25					
	Corrosion class	C3 medium according IEO/EN 12944-5					
Stator winding	Material	Copper					
	Insulation	Insulation class F					
	Winding protection	3 PTC thermistors, 150 °C					
Rotor winding	Material	Die-cast aluminum					
Balancing		Half key balancing					
Key ways		Closed key way					
Drain holes		Drain holes with closable plastic plugs, open on delivery					
External earthing bolt		As option					
Enclosure		IP 55					
Cooling method		IC411					

Total product offering

Motors, generators and mechanical power transmission products with a complete portfolio of services

IEC motors
- Low voltage motors
- High voltage induction and synchronous motors
- Marine motors
- Motors for explosive atmospheres
- Motors for food and beverage
- Motors for variable speed drives
- Permanent magnet motors
- Synchronous reluctance motors
- Traction motors

NEMA motors
- Low voltage motors
- High voltage induction and synchronous motors
- Marine motors
- Motors for explosive atmospheres
- Motors for variable speed drives
- Permanent magnet motors
- Servomotors
- Washdown motors

Generators
- Generators for wind turbines
- Generators for diesel and gas engine power plants
- Generators for steam and gas turbine power plants
- Generators for marine applications
- Generators for industrial applications
- Generators for traction applications
- Synchronous condensers for reactive power compensation

Mechanical power transmission components, bearings, gearings
- Mounted bearings
- Enclosed gearing
- Mechanical drive components
- Couplings
- Sheaves and bushings
- Conveyor components
- Geared motor units

Life cycle services

ABB's portfolio of drives

Optimal solution for you

Being able to rely on the continuous high performance and efficiency of your operations is something you want to take for granted. ABB variable-frequency drives are made with all this in mind, established upon more than 40 years of experience and backed by a broad range of life cycle services.

ABB drives help you to optimize your processes and systems with state-of-the-art motor control technology, resulting in increased energy efficiency, better product quality, and reduced operating costs with higher output, less downtime, and reduced need for maintenance. All ABB drives are designed for easy selection, ordering, installation and use, and they offer integrated safety features, giving you more time to focus on what matters for you and your business.

Our portfolio offers low-voltage AC and DC drives, medium-voltage AC drives, and motion control drives spanning the fractional-kilowatt to multi-megawatt power level. There is a drive available for essentially every industry and application, which can be used with all types of motors, in environments ranging from clean electrical rooms in buildings, to harsh coal mines and windy offshore platforms. This wide product range allows you to select the best-fitting drive solution, providing maximum reliability and efficiency for every need.

Contact us

—

For more information and contact details:

www.abb.com/motors&generators

© Copyright 2017 ABB. All rights reserved.
Specifications subject to change without notice.

9AKK105944 EN 12-2017

Zentrale

MAX LAMB GMBH & CO. KG
Am Bauhof 2
97076 Würzburg

VERTRIEB WÄLZLAGER
Telefon: +49 931 2794-210
E-Mail: wlz@lamb.de

VERTRIEB ANTRIEBSTECHNIK
Telefon: +49 931 2794-260
E-Mail: ant@lamb.de

Niederlassungen

ASCHAFFENBURG
Schwalbenrainweg 30a
63741 Aschaffenburg
Telefon: +49 6021 3488-0
Telefax: +49 6021 3488-511
E-Mail: ab@lamb.de

NÜRNBERG
Dieselstraße 18
90765 Fürth
Telefon: +49 911 766709-0
Telefax: +49 911 766709-611
E-Mail: nb@lamb.de

SCHWEINFURT
Carl-Zeiss-Straße 20
97424 Schweinfurt
Telefon: +49 9721 7659-0
Telefax: +49 9721 7659-411
E-Mail: sw@lamb.de

STUTTGART
Heerweg 15/A
73770 Denkendorf
Telefon: +49 711 93448-30
Telefax: +49 711 93448-311
E-Mail: st@lamb.de
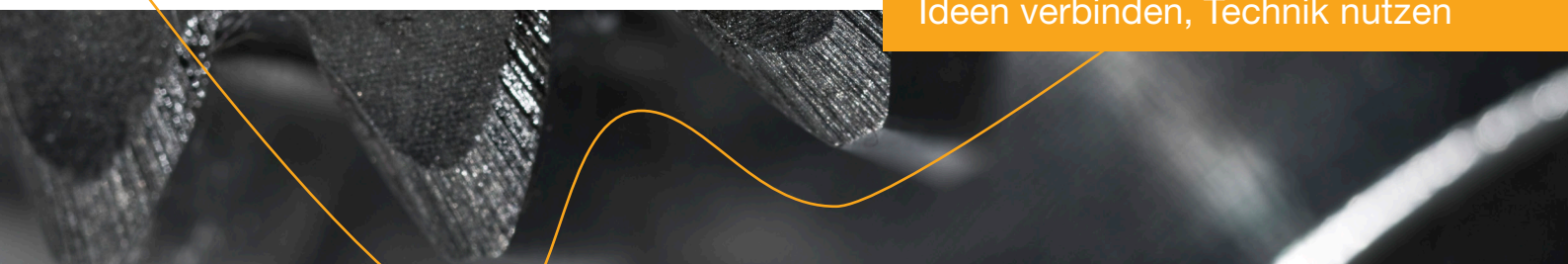
Ideen verbinden, Technik nutzen